AD-A236 556

NASA Contractor Report 185296

Space Station Auxiliary Thrust Chamber Technology

Final Report 2210-90-FR

DTIC
ELECTE
JUN 07 1991
S D
D

Philip J. Robinson
GenCorp Aerojet
Propulsion Division
Sacramento, California

July 1990

Prepared for
Lewis Research Center
Under Contract NAS3-24398

DISTRIBUTION STATEMENT A
Approved for public release;
Distribution Unlimited

NASA
National Aeronautics
and Space Administration

91-01214

91 4 104

DISCLAIMER NOTICE

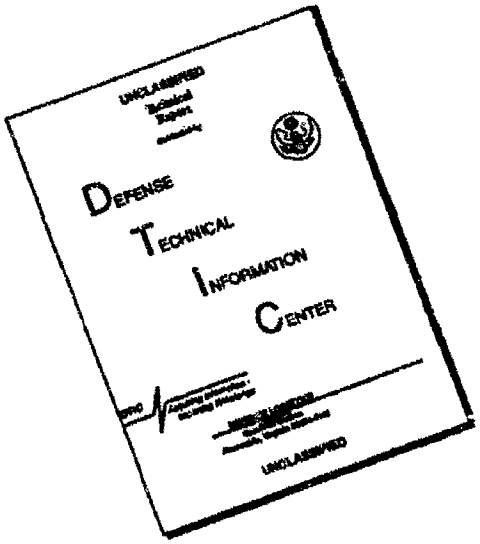

THIS DOCUMENT IS BEST QUALITY AVAILABLE. THE COPY FURNISHED TO DTIC CONTAINED A SIGNIFICANT NUMBER OF PAGES WHICH DO NOT REPRODUCE LEGIBLY.

SPACE STATION

AUXILIARY THRUST CHAMBER TECHNOLOGY

Final Report

Prepared For:

National Aeronautics and Space Administration
Lewis Research Center
Cleveland, Ohio 44135

July 1990

Contract NAS 3-24398

DTIC COPY INSPECTED 6

Accesion For
NTIS CRA&I
DTIC TAB
Unannounced
Justification
By
Distribution /
Availability Codes
Dist | Avail and/or Special
A-1

Approved By:

B. L. Reimer,
Program Manager
Space Propulsion

Prepared By:

P. J. Robinson
Project Engineer
Space Station Propulsion

GenCorp Aerojet
Propulsion Division
Sacramento, California 95813

RPT/EC095.68-FM

TABLE OF CONTENTS

		Page
I.	Summary	1
II.	Introduction	2
III.	Space Station Thruster No. 1	6
	A. Design Approach	6
	1. Design Background	6
	2. Design Concept	6
	3. Design Point	9
	B. Design Analysis	9
	1. Ignition Analysis	9
	2. Thermal Analysis	9
	3. Performance Analysis	22
	4. Chamber Life Analysis	22
	C. Design Description and Fabrication	25
	D. Test	30
	1. Test Setup	30
	2. Instrumentation	30
	3. Test Summary	30
	4. Experimental Results	39
	E. Evaluation of Results	44
	F. Conclusions	55
IV.	Space Station Thruster No. 2	56
	A. Design Approach	56
	1. Design Background	56
	2. Design Concept	56
	3. Design Point	59
	B. Design Analysis	59
	1. Ignition Analysis	59
	2. Thermal Analysis	65
	3. Performance Analysis	65
	4. Chamber Life Analysis	65
	C. Design Description and Fabrication	65

TABLE OF CONTENTS (cont.)

	Page
D. Test	72
1. Test Setup	72
2. Instrumentation	72
3. Test Summary	76
4. Experimental Results	86
E. Evaluation of Results	86
F. Conclusions	114
V. References	115
Appendix A: Detail Drawings, Thruster No. 1	A-1
Appendix B: Test Data, Thruster No. 1	B-1
Appendix C: Performance Prediction Methodology	C-1
Appendix D: Detail Drawings, Thruster No. 2	D-1

LIST OF TABLES

Table No.		Page
I	Design Requirements for Thruster No. 1	4
II	Design Requirements for Thruster No. 2	5
III	Thruster No. 1 Design Point	10
IV	Space Station Thruster No. 1 Spark Igniter Operating Characteristics	15
V	Test Instrumentation Space Station Thruster No. 1	35
VI	Thruster No. 1 Test Summary for Mixture Ratio Range	37
VII	Thruster No. 1 Test Summary for Percent Fuel Film Cooling Range	38
VIII	Design Points, NASA LeRC Space Station Thrusters	63
IX	Space Station Thruster No. 2 Spark Igniter Operating Characteristics	64
X	Design Point Performance Prediction for Thruster No. 2	67
XI	Test Instrumentation Space Station Thruster No. 2	77
XII	Thruster No. 2 Test Summary	84
XIII	Thruster No. 2 Test Summary for Percent Film Cooling Range	85
XIV	Test Data Summary for Test No. 166	92
XV	Test Data Summary for Test No. 193	93
XVI	Test Data Summary for Test No. 199	94
XVII	Test Data Summary for Test No. 207	95
XVIII	Test Data Summary for Test No. 227	96

LIST OF FIGURES

Figure No.		Page
1	Vacuum Specific Impulse vs Mixture Ratio	3
2	Proven Spark Torch Igniter Concept	7
3	Cutaway of Thruster No. 1 Assembly	8
4	Paschen's Low Curve for Air	11
5	Flame Quenching Limit for O_2/H_2	12
6	Minimum Spark Energy Requirements for O_2/H_2 Propellants	13
7	Spark Ignition Limits: High Pressure, Low Pressure, Minimum Energy Limits	14
8	Experimentally Determined Effect of Fuel Film Coolant on Delivered Specific Impulse and Mixing Efficiency	16
9	Typical Fit of Reference 5 Thermocouple Data with Conduction Code Prediction	18
10	Space Station Thruster Convergent Section Cg Profile	19
11	Comparison of Throat Heat Transfer with Turbulent and Laminar Correlations	20
12	Comparison of Reference 5 Thruster Adiabatic Wall Temperature Profile with HOCOOL Prediction	21
13	Predicted Mixing Efficiency, E_m, for Overall Mixture Ratio	23
14	Predicted Performance for Overall Mixture Ratio	24
15	Manson-Halford Method of Universal Slopes for Low Cycle Fatigue	26
16	Machined ZrCu Chamber Liner - Thruster No. 1	27
17	Completed Chamber Assembly - Thruster No. 1	28
18	Sleeve Insert	29
19	Aerojet Altitude Test Facility for Small Thrusters	31
20	Thruster Mounted to the Thrust Measuring Test Stand	32
21	Test Cell with Mounted Test Stand	33
22	Chamber Thermocouple Location	34
23	Backside Temperature Profile with 60 Percent FFC	40
24	Backside Temperature Profile with 75 Percent FFC	41
25	Maximum Backside Temperature Variation with FFC	42
26	Maximum Backside Temperature Variation with Mixture Ratio	43
27	Performance Variation with Percent FFC	45
28	Performance Variation with Mixture Ratio	46
29	Two Mixing Zones of Thruster Design	47

LIST OF FIGURES (cont.)

Figure No.		Page
30	Energy Release Efficiency and Specific Impulse Trends with Increasing O/F	50
31	Energy Release for Constant % FFC and Velocity Ratio	51
32	Current Space Station Thruster Has Inadequate H_2/O_2 Momentum Flux Ratio and Mixing Length for Core Flow at High Mixing Ratio	52
33	Momentum Flux Ratio for Different % FFC and O/F	53
34	ERE for Increasing % FFC and Momentum Flux Ratio	54
35	Mixing Efficiency, E_T, for Thruster No. 1	57
36	Thruster No. 2 Assembly	58
37	Redesign of Injector/Sleeve Interface	60
38	Momentum Flux Ratio Compared for Thruster Nos. 1 and 2	61
39	Mixing Efficiency, E_T, Compared for Thruster Nos. 1 and 2	62
40	Predicted Gas-Side Wall Temperature Profile for Nominal Chamber Pressure	66
41	Predicted Gas-Side Wall Temperature Profile for 40 Percent of Nominal Chamber Pressure	68
42	Predicted Gas-Side Wall Temperature Profile for 135 Percent of Nominal Chamber Pressure	69
43	Performance Predictions for Operating Range of Thruster No. 2	70
44	Effects of Nozzle Extensions on Delivered Performance	71
45	Machined ZrCu Chamber Liner for Thruster No. 2	73
46	Thruster Chamber Assembly - Aft End	74
47	Thruster Chamber Assembly - Head End	75
48	Instrumentation Schematic for Space Station Thruster No. 2	79
49	Axial Positions of Thermocouples	80
50	Internal Thermocouple (TCI) Row Designations	81
51	Row A and Row C Thermocouples	82
52	Row B and Row D Thermocouples	83
53	Predicted vs Measured Performance for an Assumed Injector ERE of 97.0%	87
54	Predicted vs Measured Performance for an Assumed Injector ERE of 96.1%	88
55	Measured vs Predicted Wall Temperatures at the Design Point	89
56	Thermocouple Grid Positions	91
57	Measured Back-Side Wall Temperatures for Test No. 166	97
58	Measured Back-Side Wall Temperatures for Test No. 193	98

LIST OF FIGURES (cont.)

Figure No.		Page
59	Measured Back-Side Wall Temperatures for Test No. 199	99
60	Measured Back-Side Wall Temperatures for Test No. 207	100
61	Measured Back-Side Wall Temperatures for Test No. 227	101
62	Predicted vs Measured Back-Side Wall Temperatures for the Thruster Design Point	102
63	Cgn Profile for Calibrated Model	103
64	Predicted Stream Tube Mixture Ratios	104
65	Predicted Adiabatic Wall Temperatures	105
66	Predicted vs Measured Back-Side Wall Temperatures for Test No. 193	106
67	Predicted vs Measured Back-Side Wall Temperatures for Test No. 207	107
68	Predicted vs Measured Back-Side Wall Temperatures for Test No. 227	108
69	Predicted vs Measured Back-Side Wall Temperatures for Test No. 166	109
70	Predicted Maximum Wall Temperatures for Design Point	111
71	Revised Space Station Thruster Performance Predictions for Calibrated Thermal Model	112
72	Performance Improvement for Space Station Thruster No. 2	113

NASA
National Aeronautics and Space Administration

REPORT DOCUMENTATION PAGE

1. Report No.	2. Government Accession No.	3. Recipient's Catalog No.
NASA-CR-185296		

4. Title And Subtitle Space Station Auxiliary Thrust Chamber Technology	5. Report Date July 1990 6. Performing Organization Code
7. Author(s) Philip J. Robinson	8. Performing Organization Report No.
9. Performing Organization Name and Address GenCorp Aerojet Propulsion Division P.O. Box 13222 Sacramento, CA 95813-6000	10. Work Unit No. 506-42-31 11. Contract or Grant No. NAS 3-24398
12. Sponsoring Agency Name and Address National Aeronautics and Space Administration Lewis Research Center Cleveland, Ohio 44135-3191	13. Type of Report and Period Covered Contractor Report Final 14. Sponsoring Agency Code

15. Supplementary Notes

Project Manager - Dr. Steven J. Schneider, Space Propulsion Technology Division
NASA Lewis Research Center

16. Abstract

The objective of the program documented herein was to establish a technical data base to support future development of GO2/GH2 flight thrusters for a Space Station Auxiliary Propulsion System. Specific issues of concern were thruster performance and cycle life. To address these issues, NASA funded Aerojet to design, fabricate and altitude test two 25-lbf GO2/GH2 thrusters. The first thruster was designed to operate at a nominal mixture ratio (O/F) of 4.0 and expansion area ratio (ε) of 100:1. It was tested over a range of O/F from 2.0 to 8.0, achieving a range of specific impulse (Isp) from 440 to 310 lbf-sec/lbm. The second thruster was optimized for a nominal O/F of 8.0 at a lower nozzle expansion area ratio ε of 30:1. This second thruster was tested over an O/F range of 3.0 to 9.5, achieving an Isp range of 416 to 3323 lbf-sec/lbm, respectively. At O/F = 8.0, the Isp was 360 lbf-sec/lbm, as predicted.

17. Key Words (Suggested by Author(s))	18. Distribution Statement
Rockets, Space Station, hydrogen/oxygen, regenerative, high-performance, long-life	Unclassified Unlimited Subject Category 20

19. Security Classif. (of this report)	20. Security Classif. (of this page)	21. No. of pages	22. Price
Unclassified	Unclassified	172	A05

NASA FORM 1626 OCT 86

I. SUMMARY

The objective of the program documented herein was to establish a technical data base to support future development of GO_2/GH_2 flight thrusters for a Space Station Auxiliary Propulsion System. Specific issues of concern were thruster performance and cycle life. To address these issues, NASA funded Aerojet to design, fabricate and altitude test two 25-lbf GO_2/GH_2 thrusters. The first thruster was designed to operate at a nominal mixture ratio (O/F) of 4.0, and expansion area ratio (ε) of 100:1. It was tested over a range of O/F from 2.0 to 8.0, achieving a range of specific impulse (I_{sp}) from 440 to 310 lbf-sec/lbm. The second thruster was optimized for a nominal O/F of 8.0 at a lower nozzle expansion area ratio ε of 30:1. This second thruster was tested over an O/F range of 3.0 to 9.5, achieving an I_{sp} range of 416 to 332 lbf-sec/lbm, respectively. At O/F = 8.0, the I_{sp} was 360 lbf-sec/lbm, as predicted.

II. INTRODUCTION

The development of the Space Shuttle has made it possible to develop a Space Station. Such a Space Station requires an onboard auxiliary propulsion system (APS) to provide for vehicle reboost, attitude control, and docking and avoidance maneuvers. A key component of this onboard APS is the thruster design. To develop the required thruster technology base to support the Space Station Project, the National Aeronautics and Space Administration (NASA) Lewis Research Center (LeRC) has sponsored a development program under Contract No. NAS 3-24398. During this NASA LeRC sponsored program, two similar, yet distinct, 25-lbf gaseous oxygen/hydrogen (GO_2/GH_2) thrusters have been designed, fabricated and altitude tested to provide the necessary technology base for the future design of the Space Station APS thrusters.

The initial thruster was designed for operation at a nominal mixture ratio (O/F) of 4.0. This mixture ratio provided the maximum theoretical specific impulse, as indicated in Figure 1. Design requirements for this initial thruster, designated Thruster No 1, are provided in Table I. During the course of the analysis, design and fabrication of Thruster No. 1, the Space Station propulsion requirements evolved. Specifically, the operating mixture ratio changed from 4.0 to 8.0, which was consistent with water electrolysis, the proposed method of generating the onboard GO_2/GH_2 propellants. Thruster No. 1 was completed as originally designed to meet the requirements of Table I; however, during the testing phase, the hot-fire mixture ratio range was extended from 3-5 to 2-8, to be responsive to the evolved requirements. The performance at the higher O/F values was not optimum, because those values lay in an off-design regime.

To evaluate a thruster optimized at an O/F of 8.0, NASA LeRC funded a redesign of the 25 lbf thruster, specifically the injector. The results of the test data evaluation from Thruster No. 1 were used to calibrate the thermal and hydraulic models utilized in the redesign effort. The new requirements, as given in Table II, were established by NASA LeRC. This redesigned thruster, designated Thruster No. 2, was fabricated and altitude tested, yielding excellent results and confirming the design and analysis methodology employed.

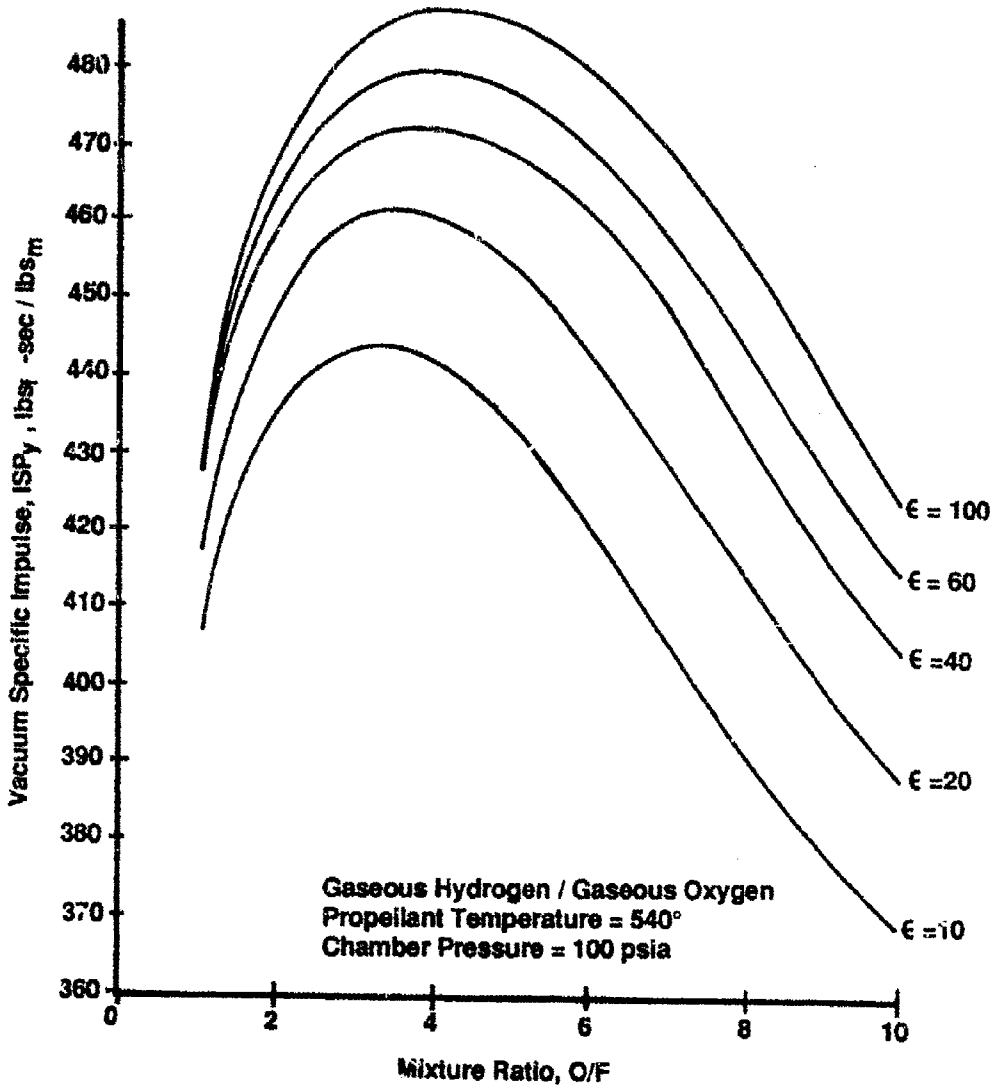

Figure 1. Vacuum Specific Impulse vs. Mixture Ratio (P_c = 100 psia)

TABLE I

DESIGN REQUIREMENTS FOR THRUSTER NO. 1

Propellants	GO_2/GH_2
Mixture Ratio, O/F	4.0 ± 1.0
Specific Impulse, ISP	$\geq$ 400 lbf-sec/lbm
Fuel Inlet Temperature, TFI	200° - 530°R
Oxidizer Inlet Temperature, TOI	300° - 530°R
Total Impulse, I_{tot}	2.0×10^6 lbf-sec
Minimum Impulse Bit, I_{bit}	2.0 lbf-sec

TABLE II

DESIGN REQUIREMENTS FOR THRUSTER NO. 2

Propellants	GO_2/GH_2
Mixture Ratio, O/F	8.0
Thrust, F	25.0 lbf
Specific Impulse, ISP	346 lbf-sec/lbm*
Fuel Inlet Temperature, TFI	200° - 530°R
Oxidizer Inlet Temperature, TOI	300° - 530°R
Total Impulse, I_{tot}	6.0×10^6 lbf-sec
Minimum Impulse Bit, I_{bit}	2.0 lbf-sec
Throttling, % of Nominal P_c	50% - 125%

*Minimum specific impulse (Isp) required for an expansion area ratio (ε) of 30:1. An Isp of 346 lbf-sec/lbm at $\varepsilon = 30$ would ensure an Isp of 380 lbf-sec/lbm at $\varepsilon = 100$.

III. SPACE STATION THRUSTER NO. 1

A. DESIGN APPROACH

1. Design Background

Several programs[1,2,3] conducted by Aerojet for NASA in the early 1970's provided the basis for the current thruster design, namely a proven spark torch igniter. This igniter concept utilized two-stage ignition, as shown in Figure 2. The first stage injected a small portion (10%) of the fuel into all of the oxidizer that flowed around the spark plug tip and ignited at Point ① of Figure 2. This oxidizer-rich (O/F = 50) mixture flowed down the center (Point ②) of a sleeve insert which was regeneratively cooled with the remaining (90%) of the fuel. At Point ③, the balance of the fuel was injected into the oxidizer-rich core, resulting in a fuel-rich (O/F = 2.0) torch at Point ④ which, in turn, ignited the main injector. This igniter design was demonstrated with GO_2/GH_2 in more than 100,000 firings over a mixture ratio range of 2 to about 250 and inlet temperatures from normal boiling point to ambient.

Aerojet suspected that the igniter, used in these programs involving larger thrusters, could be operated continuously with a small regeneratively cooled chamber to meet the requirements of a small (25-lbf) O_2/H_2 thruster. This concept was designated the integral igniter injector with regeneratively cooled thrust chamber, i.e., I^3-Regen, and was demonstrated in a program in the early 1980's. A residual igniter from the 1970's programs was used as the injector for both radiation and regeneratively cooled thrusters developed by Aerojet in a program[4] sponsored by the Jet Propulsion Laboratory (JPL). The JPL test results served as the starting point for the NASA LeRC Space Station thruster design.

2. Design Concept

The assembly for Thruster No. 1, as shown in the cutaway of Figure 3, consists of a combination (integral) igniter injector, a regeneratively cooled thrust chamber, fuel balancing orifices and a sleeve insert at the chamber forward end. Integral, directly-actuated poppet-type valves control the flow of propellants to the thruster. Fuel is first used to regeneratively cool the thrust chamber, flowing counter to the combustion gases. As the fuel exits the chamber coolant channels at the forward end, it is collected in an annular manifold formed at the interface between the integral igniter injector and the thrust chamber. This annular manifold feeds two sets of radial flow passages. One set of passages supplies hydrogen to the injector where it impinges radially on the axial flow of spark-energized oxygen, causing ignition in the

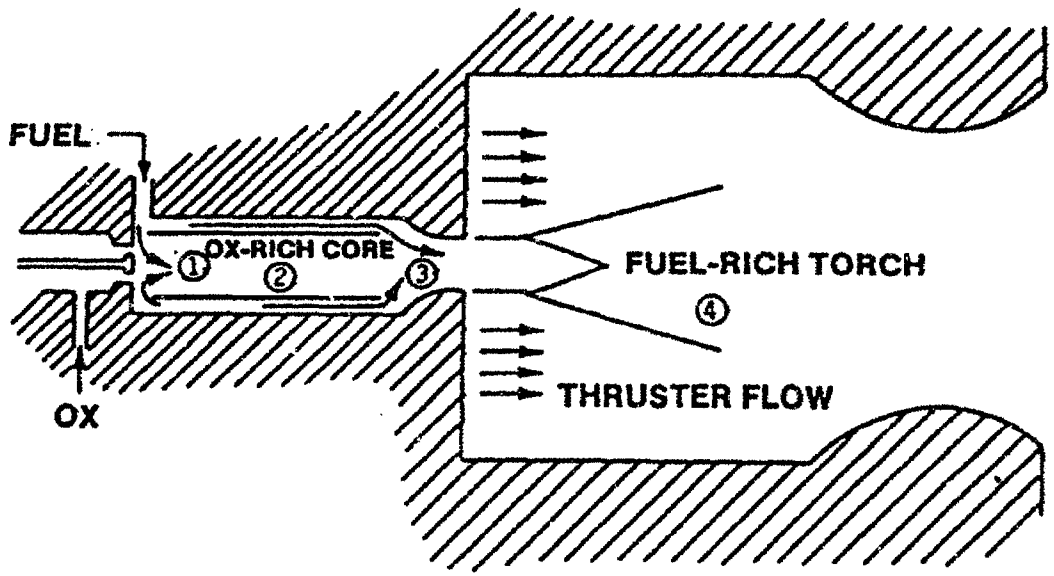

Figure 2. Proven Spark Torch Igniter Concept

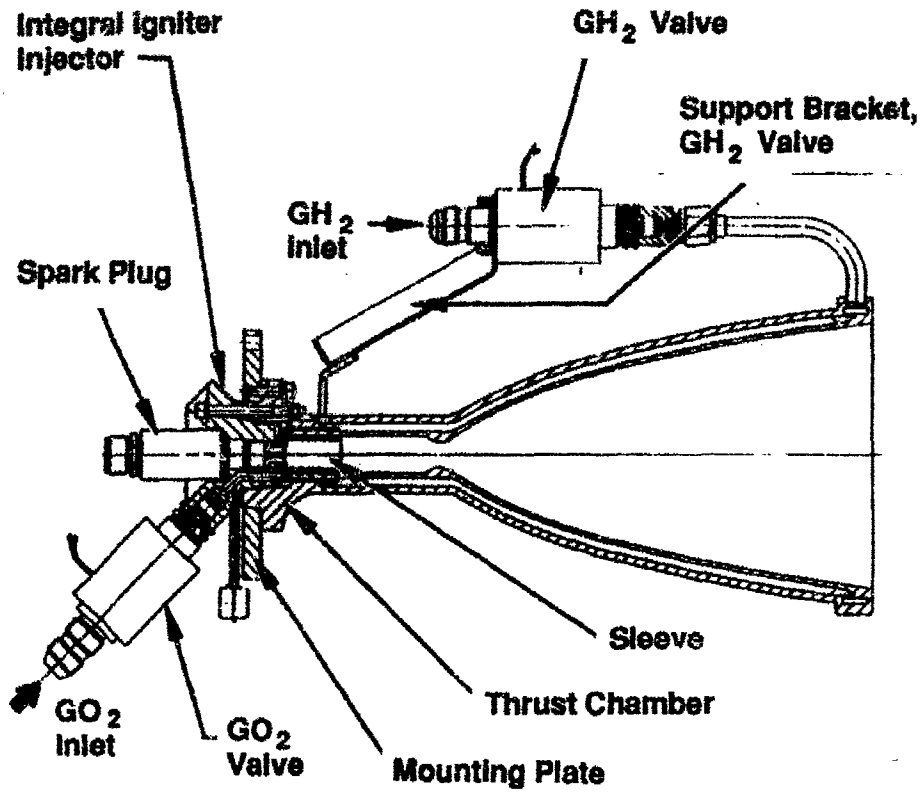

Figure 3. Cutaway of Thruster No.1 Assembly

oxidizer-rich core. For an overall mixture ratio of four (4.0), the core O/F is 16.0. The second set of radial flow passages meters the remainder of the hydrogen into axially-slotted passages on the outer surface of the sleeve insert. This hydrogen is injected axially as film or barrier cooling along the inner wall of the thrust chamber. The film coolant and injector core streams progressively mix as the core flow is entrained into the film coolant stream, achieving the nominal overall O/F of 4.0.

3. Design Point

The design point for Thruster No. 1, based on the original contract requirements, is presented in Table III. Evolution of the Space Station APS requirements to be synergistic with water electrolysis occurred subsequent to the establishment and implementation of this design point.

B. DESIGN ANALYSIS

1. Ignition Analysis

An extensive data base and analytical/design capability have been established for spark-initiated igniters highlighted by the curves in Figures 4, 5, and 6[1,2]. These curves define the ignition/no ignition boundaries for high pressure, low pressure, and minimum energy limits, as illustrated in Figure 7. Based on this extensive data base, the spark igniter operating characteristics for Thruster No. 1 are as indicated in Table IV.

2. Thermal Analysis

Optimum thruster performance occurred with 60 percent fuel film cooling (FFC), as indicated by the JPL performance data of Figure 8; however, since the thruster sleeve cooling was predicted to be marginal at 60 percent fuel film cooling, 75 percent fuel film cooling was selected for the thruster baseline design.

A thermal model of the thruster was developed with the computer code HOCOOL[6,7] which was used for determining coolant requirements and for predicting thermal response of rocket thrust chambers, specifically those with hydrogen film and regenerative cooling. HOCOOL required the input of two empirical constants: the heat transfer correlation

TABLE III

THRUSTER NO. 1 DESIGN POINT

Thrust, F-lbf	25
Chamber Pressure, Pc-psia	75
% FFC	75
Overall Mixture Ratio, MR	4.0 ± 1.0
Core Mixture Ratio, MR_{core}	16.0 ± 4.0
Fuel Inlet Temperature, TFI-°R	200 - 530
Oxidizer Inlet Temperature, TOI-°R	300 - 530
Throat Diameter, D_T-in.	.500
Chamber Diameter, D_C-in.	.750
Contraction Area Ratio, ε_c	2.25
Expansion Area Ratio, ε	100
Chamber Length, L', in.	1.925

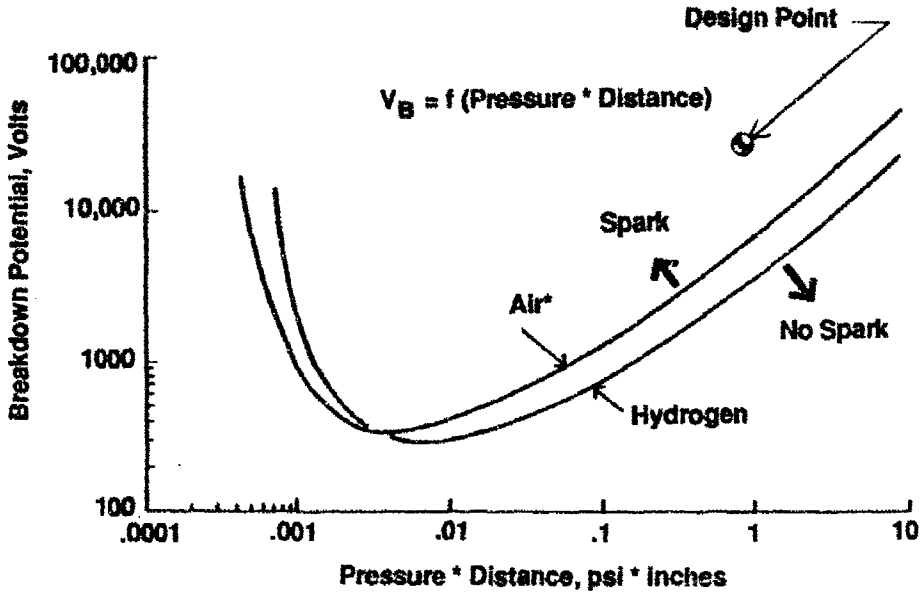

*Air is assumed to Behave Like Oxygen

Figure 4. Paschen's Law Curve for Air*

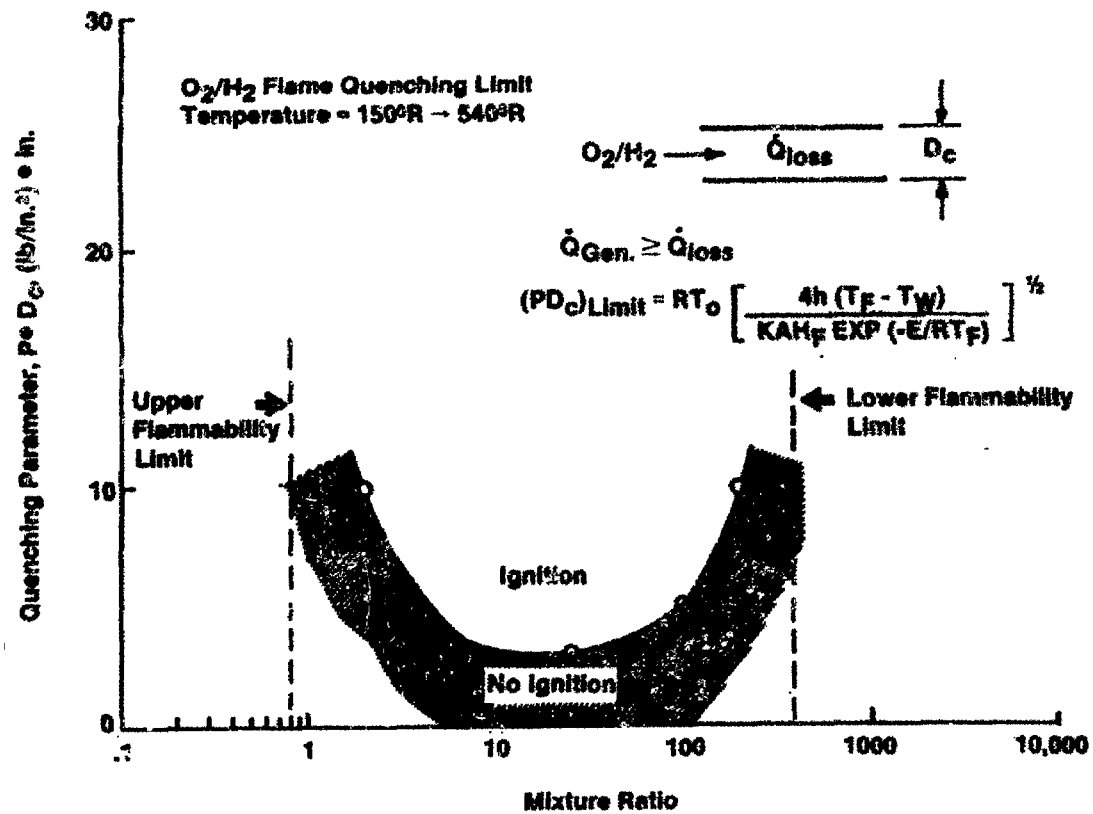

Figure 5. Flame Quenching Limit for O_2 /H_2

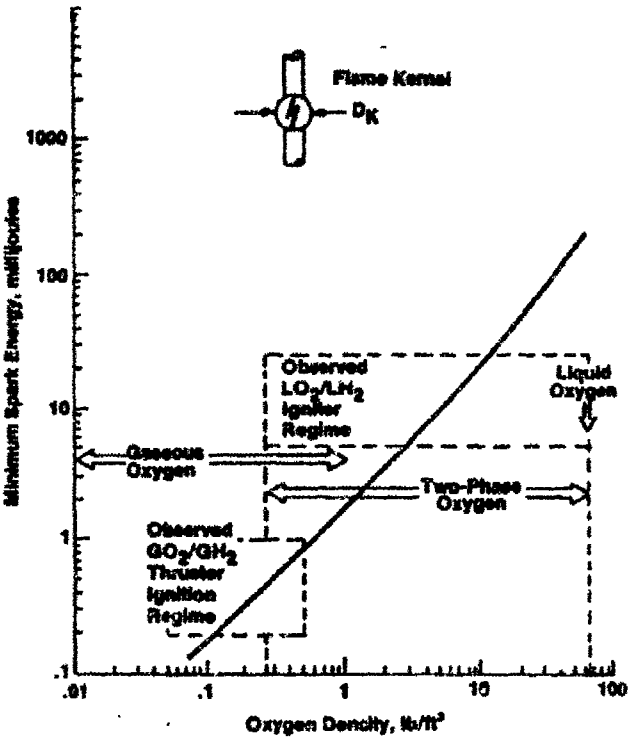

Figure 6. Minimum Spark Energy Requirements for O_2/H_2 Propellants

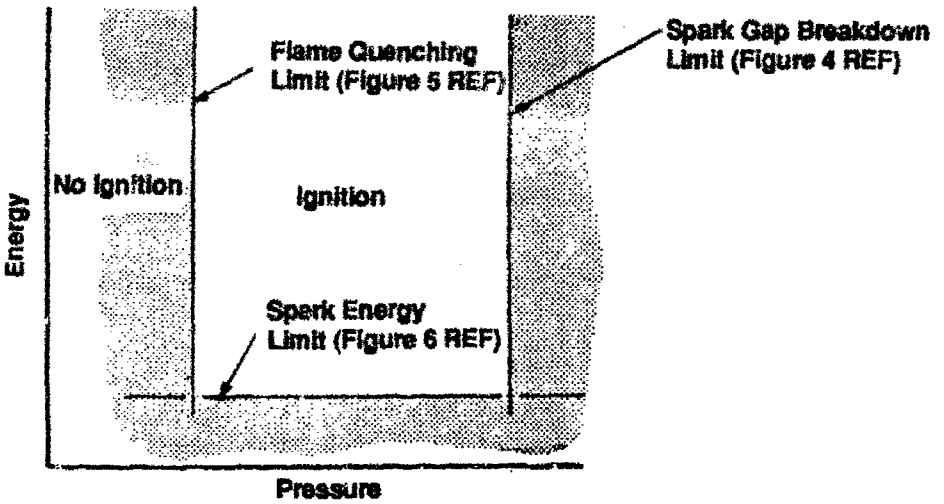

Figure 7. Spark Ignition limits: High Pressure, Low Pressure, Minimum Energy Limits

TABLE IV

SPACE STATION THRUSTER NO. 1
SPARK IGNITER OPERATING CHARACTERISTICS

Spark Igniter Energy, mJ	10 min
Spark Rate, SPS (Hz)	300
Spark Gap, in.	0.050
Igniter Sleeve I.D., in.	0.575
Breakdown Potential, Volts	30,000 min.
Minimum Ignition Pressure, psia	9
Maximum Ignition Pressure, psia	110
Predicted Nominal Cold Flow Pressure, psia	22

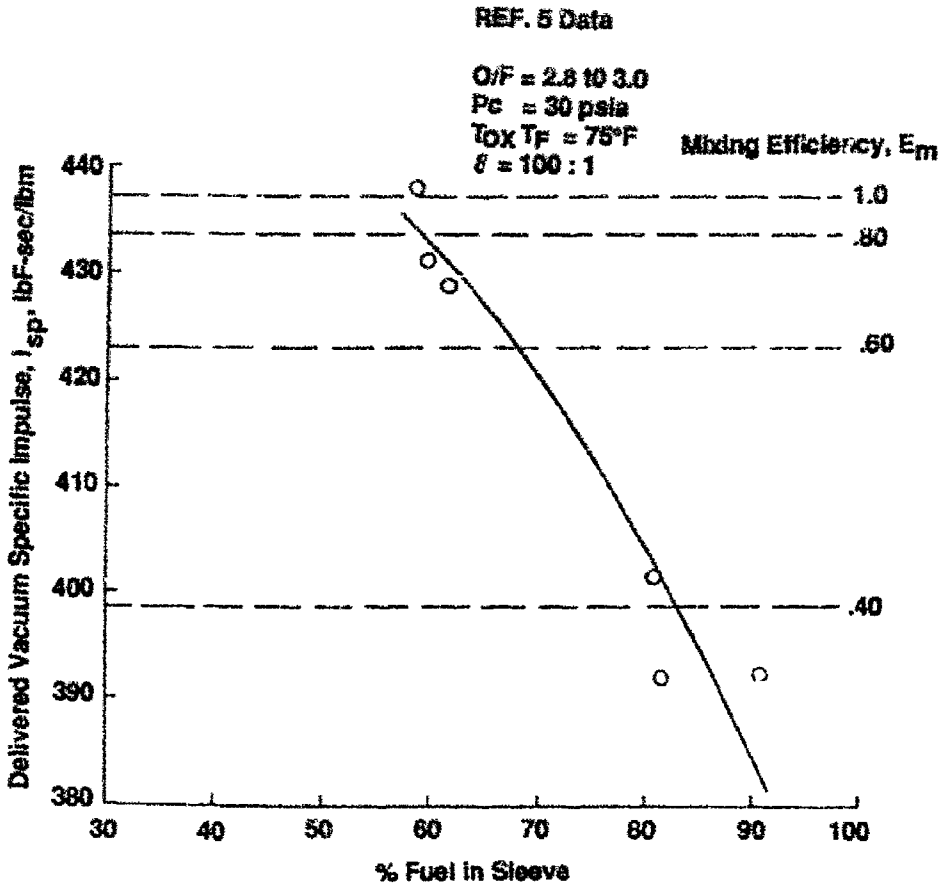

Figure 8. Experimentally Determined Effect of Fuel Film Coolant on Specific Impulse and Mixing Efficiency

coefficient, Cg_n, and the entrainment fraction, KSO. The first constant, Cg_n, modified the classical Bartz heat transfer coefficient to account for flow acceleration effects and injector characteristics on chamber heat transfer.

The entrainment model of HOCOOL utilized a two stream tube mixing model. In this model, the core gases from the main injector were considered to be entrained by and to mix with the film coolant. This mixing layer comprised one of the stream tubes. The other stream tube was the mixed oxidizer-rich core of combustion gases. The rate of entrainment of the core gases into the mixing layer was defined by the entrainment fraction, KSO.

The Cg_n profile and the entrainment fraction were based on the JPL thruster test program. During this program, a thin-walled 100:1 area ratio rhenium thruster was fired over a range of chamber pressure from 30 to 190 psia and mixture ratios from 2.0 to 3.4. Analysis of thermocouple data defined the Cg_n and the adiabatic wall temperature profiles, the latter of which determines the entrainment fraction.

a. Cg_n and Adiabatic Wall Temperature Profiles

By performing transient wall analyses with a one-dimensional heat conduction code, thermocouple transients from the test data were matched to determine heat transfer coefficients and adiabatic wall temperatures. Figure 9 presents a typical match between the transient data and computer code calculations. Very good agreement was obtained. The heat transfer coefficient s determined with the conduction code have been correlated to the Bartz coefficient for non-reactive turbulent flow. The convergent section Cg_n profile resulting from this correlation is shown in Figure 10.

Possible flow relaminarization in the convergent section may reduce the heat transfer coefficient due to the different functional dependence on Reynolds number as shown in Figure 11. The turbulent correlation was used for design purposes, thus providing a potential 30% design margin.

b. Entrainment Fraction

The entrainment fraction was inferred from the adiabatic wall temperature profiles. A typical comparison of the empirical adiabatic wall temperatures with HOCOOL calculations is shown in Figure 12. HOCOOL very accurately predicted the throat adiabatic wall

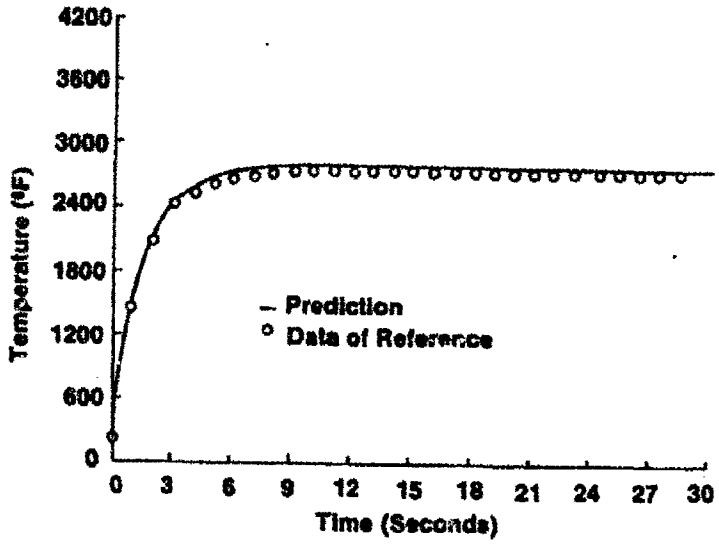

Figure 9. Typical Fit of Reference 5 Thermocouple Data with Conduction Code Prediction

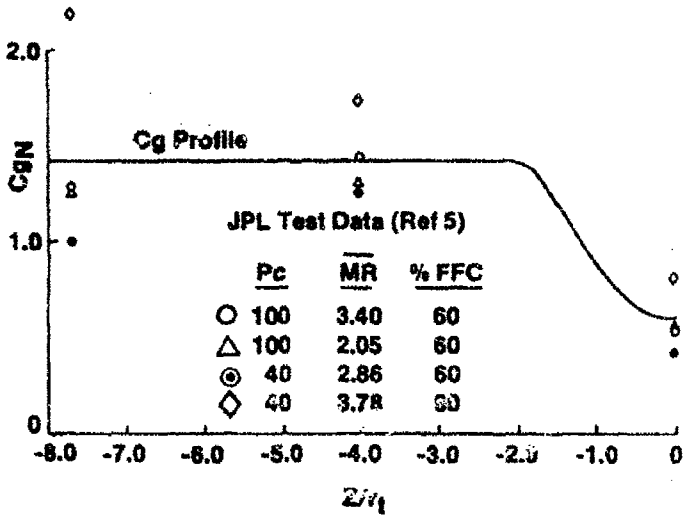

Figure 10. Space Station Thruster Convergent Section Cg Profile

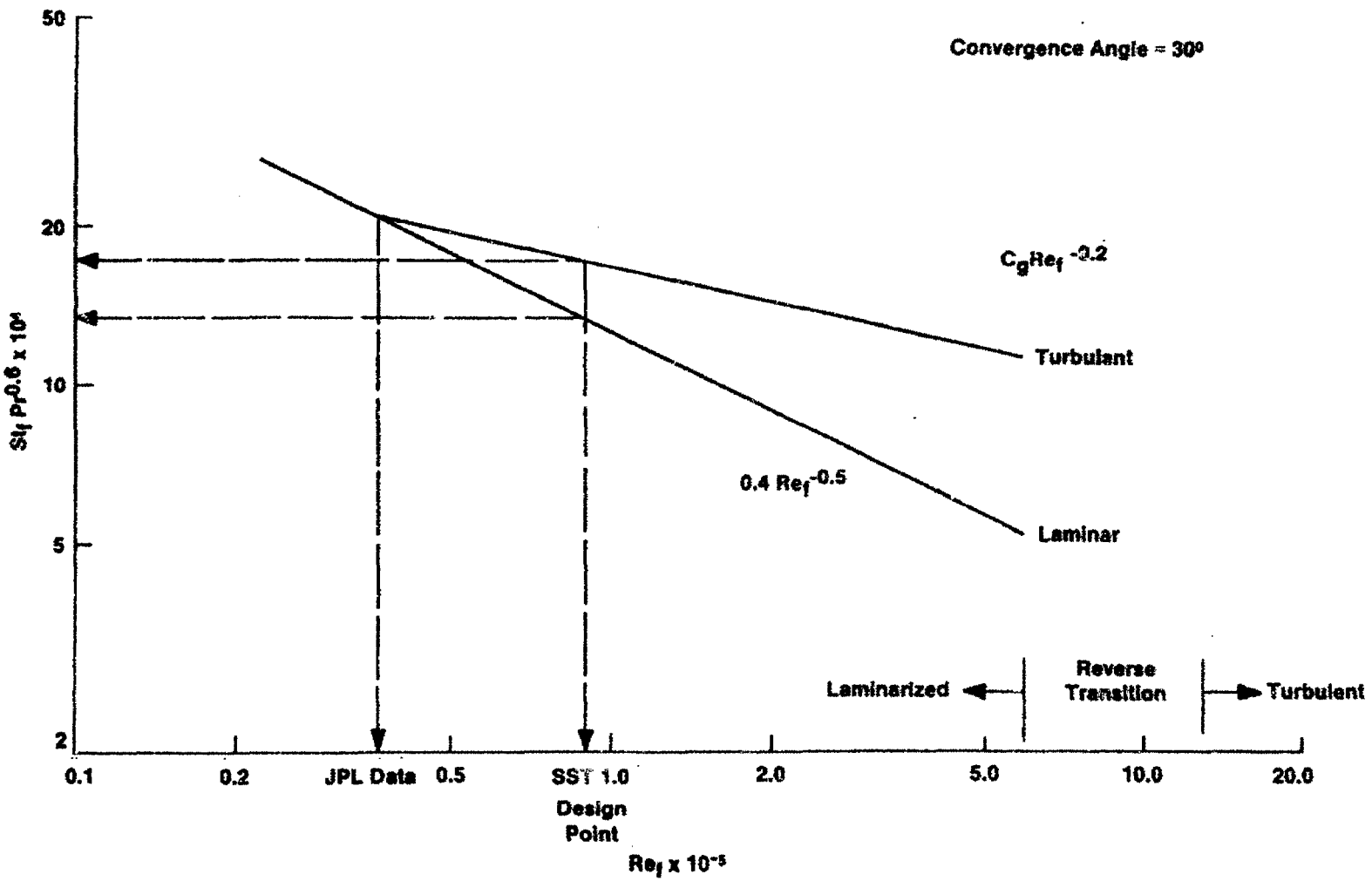

Figure 11. Comparison of Throat Heat Transfer with Turbulent and Laminar Correlations

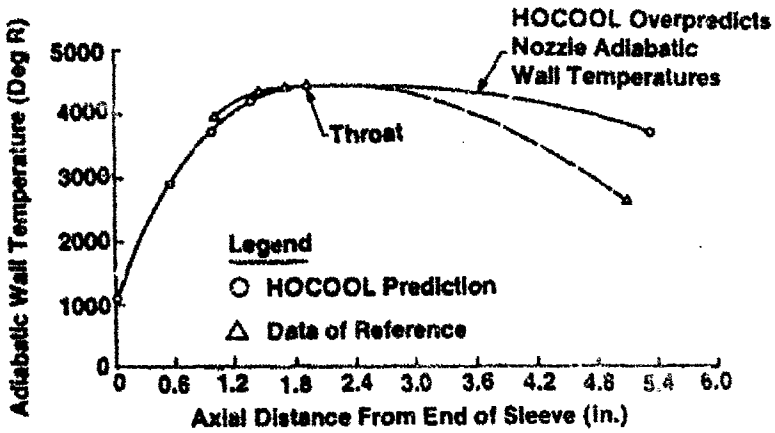

Figure 12. Comparison of Reference 5 Thruster Adiabatic Wall Temperature Profile with HOCOOL Prediction

temperature but somewhat over-predicted divergent nozzle temperatures. Appropriate modifications were made to the latter for design purposes.

3. Performance Analysis

Combustion performance of GO_2/GH_2 was evaluated parametrically over broad ranges of design points and operating conditions using the TDK and TBL computer programs[8,9] The results of these parametric studies were incorporated into a performance prediction model called ROCKET. To account for the impact of incomplete mixing, ROCKET utilized a mixing efficiency parameter, Em,[10] which is defined for the simplified two stream tube flow characterization as follows:

$$E_m = \left\{ 1 - X_o \left[\frac{(O/F)_o - (O/F)}{1 + (O/F)_o} \right] - X_F \left[\frac{(O/F) - (O/F)_f}{(O/F)\left[1 + (O/F)_f\right]} \right] \right\}$$

where:

$(O/F)_o$ = mixture ratio of oxidizer-rich stream tube
$(O/F)_f$ = mixture ratio of fuel-rich stream tube
X_o = mass fraction of oxidizer-rich stream tube
X_f = mass fraction of fuel-rich stream tube

Performance predictions were based on thermal analysis of the JPL test data which characterizes the mixing between the core and the film coolant streams in terms of Em values. Subsequent analysis using ROCKET and these E_m values determined the predicted specific impulse (I_{sp}) for the various operating points being evaluated. Figures 13 and 14 show the predicted E_m and I_{sp} values, respectively, as a function of overall mixture ratio. The predicted values in these two figures were for an injector energy release efficiency (ERE) of 100 percent, i.e., a perfect injector.

4. Chamber Life Analysis

The 2.0×10^6 lbf-sec impulse requirement equates to a total firing duration of 22.2 hours at a thrust of 25 lbf. During the 10-year design life, the actual duty cycle is expected to comprise about 500 deep thermal cycles and perhaps 100,000 impulse bits. The thruster will easily meet these requirements. The cycle life estimate is based on the Manson-Halford method of universal slopes.[11] The thermal strain in the chamber wall is determined at the point of

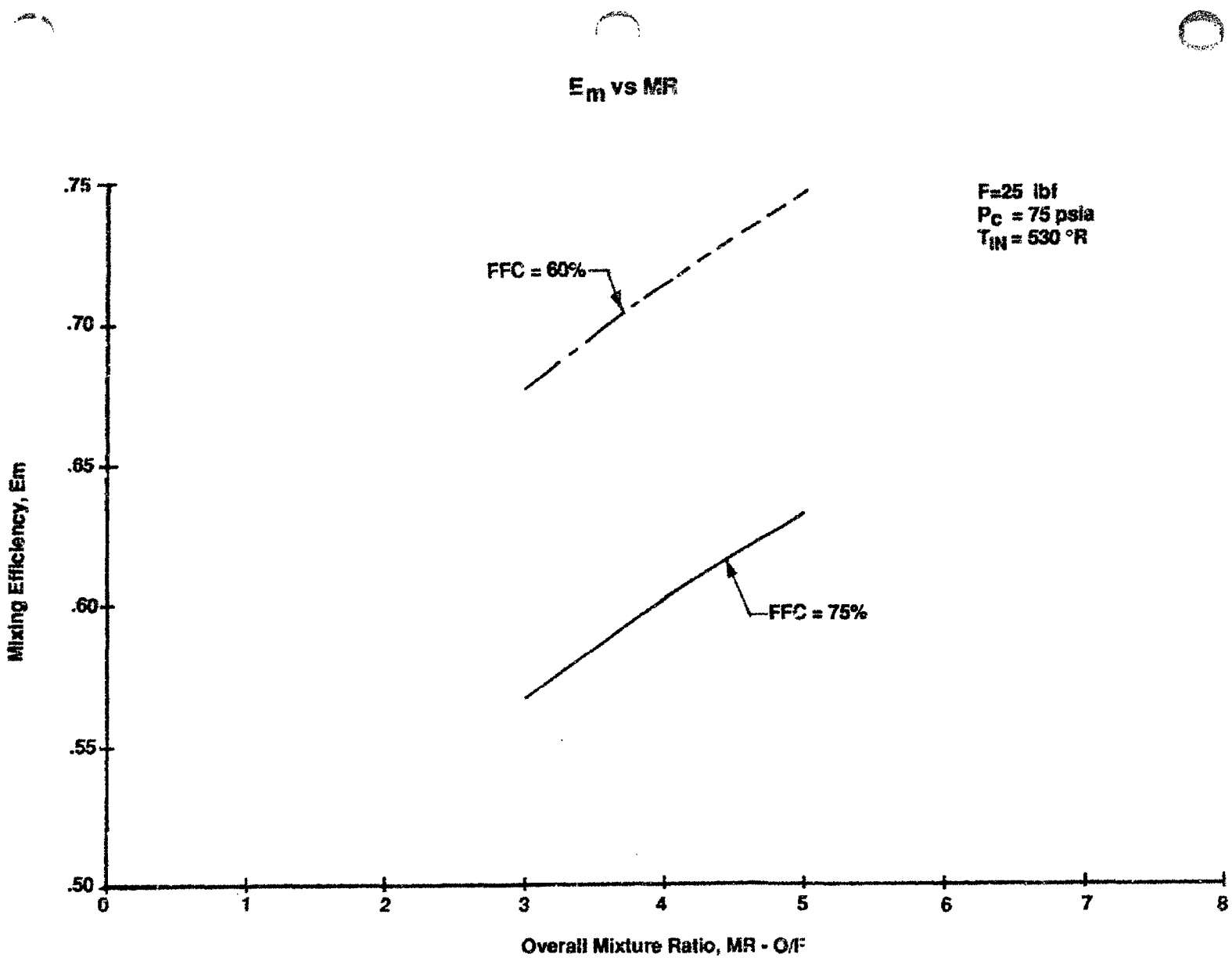

Figure 13. Predicted Mixing Efficiency, E_m, for Overall Mixture Ratio

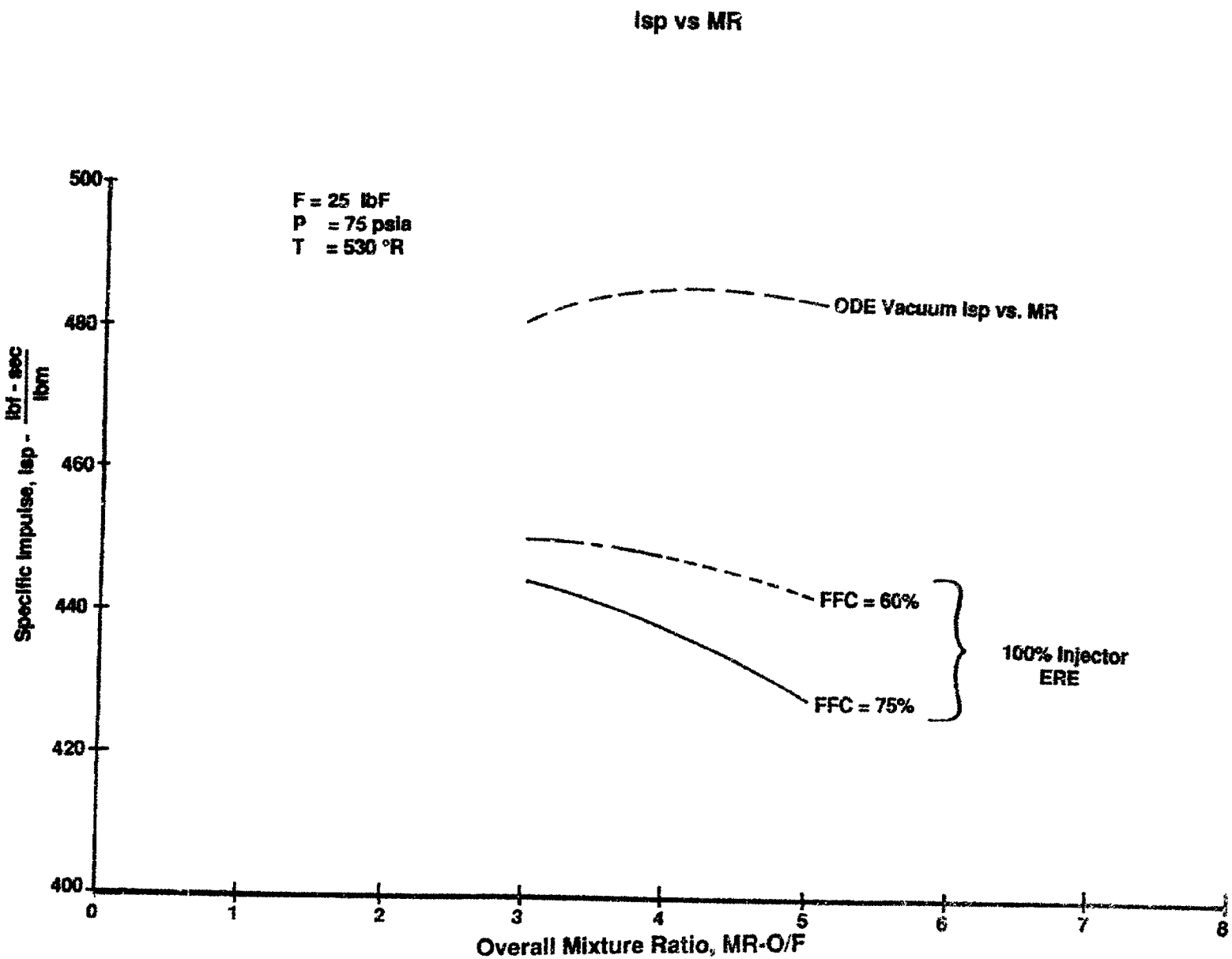

Figure 14. Predicted Perform: › For Overall Mixture Ratio

maximum gas side temperature, using finite element thermal and structural models. The calculated strain range is used, as shown in Figure 15, to obtain the predicted cycle life for a given temperature and time at temperature.

Chamber life for the thruster has been estimated to exceed 500 deep thermal cycles. About seventy deep thermal cycles have been demonstrated in test. Based on wall temperatures being lower than predicted, the updated life prediction is about 2000 deep thermal cycles. Impulse bit capability is effectively infinite because very little thermal strain is developed during short firings.

C. DESIGN DESCRIPTION AND FABRICATION

The thruster design consists of three major components: the thrust chamber, the sleeve insert, and the integral igniter injector. The thrust chamber is made of an axially slotted zirconium-copper liner that has an electroformed nickel (EFNi) outer jacket. The EFNi jacket closes out the 24 chamber coolant channels and provides structural support for the copper liner. The diverging section of the chamber is an optimized Rao contour with a potential flow expansion area ratio of 100:1. Figure 16 shows the machined chamber liner and Figure 17 shows the completed thrust chamber.

The sleeve insert, shown in Figure 18, is designed to fit into the forward end of the thrust chamber. Flow-balancing orifices divide the hydrogen flow, which exits the chamber coolant channels between the injector and the sleeve. The sleeve is made of nickel (Ni-200) and has 18 axial slots cut into the outer diameter for regenerative cooling and axial injection.

The integral igniter injector consists of a machined stainless steel igniter body and a nickel (Ni-200) platelet injector. Propellant distribution and metering occur within the photoetched flow passages of the individual injector platelets. These individual platelets are diffusion-bonded to form a homogeneous structure which becomes the injector. The injector is brazed to the igniter body to complete the assembly. Provisions are made within the igniter body to mount the spark plug, the chamber pressure transducer and the oxidizer valve. Both propellant valves mount directly onto the thruster. Figure 3 shows a cutaway of the thruster assembly with all of the thruster components identified.

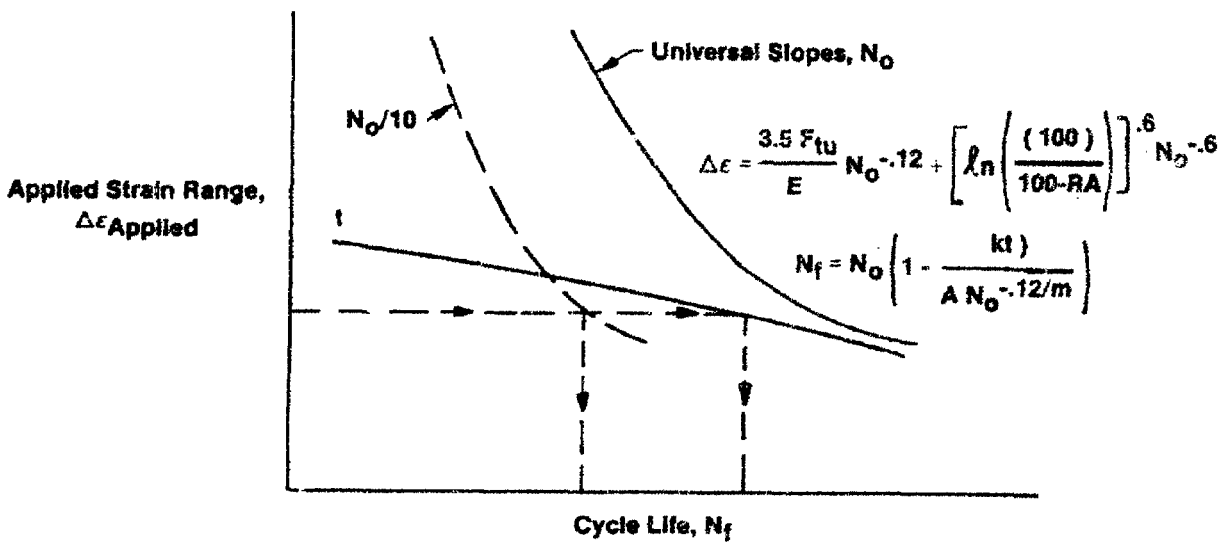

Enter Curve at $\Delta\varepsilon_{Applied}$ and Define N_f as Minimum N_f from Cumulative Time Curve, t, or $N_o/10$, whichever is Less.

Figure 15. Manson-Halford Method of Universal Slopes for Low Cycle Fatigue

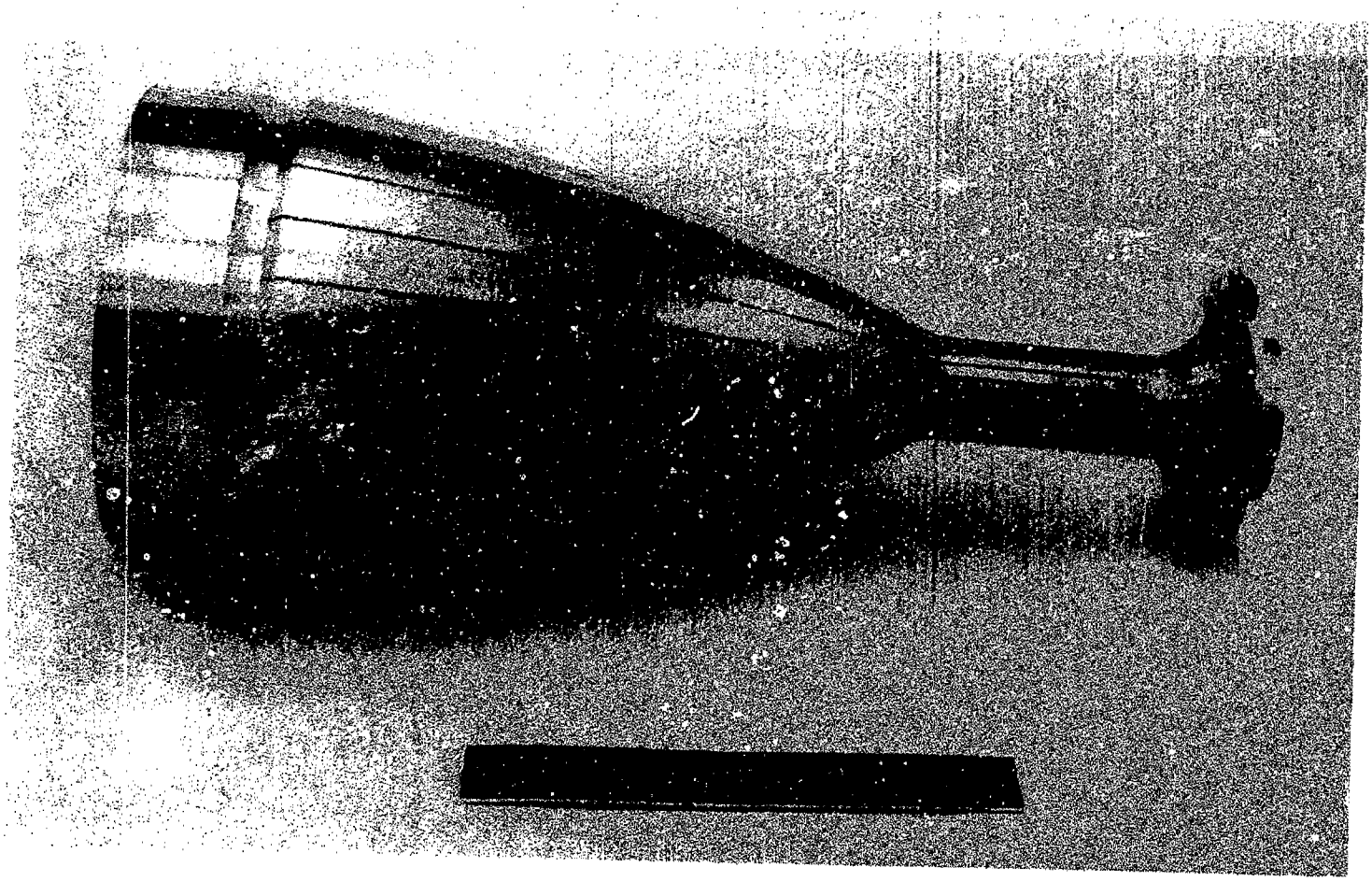

C1185 2790

Figure 16. Machined ZrCu Chamber Liner - Thruster No. 1

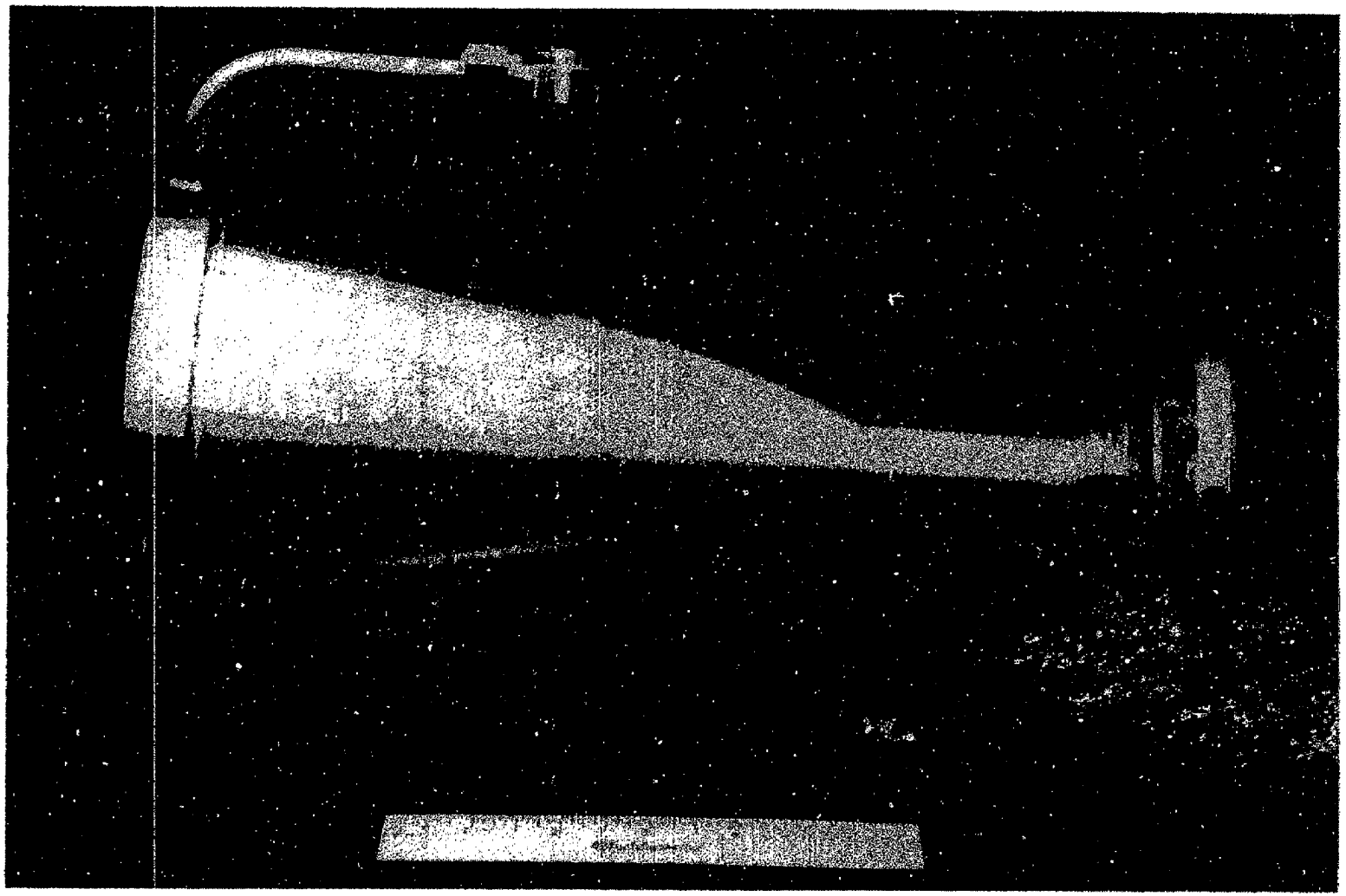

Figure 17. Completed Chamber Assembly - Thruster No. 1

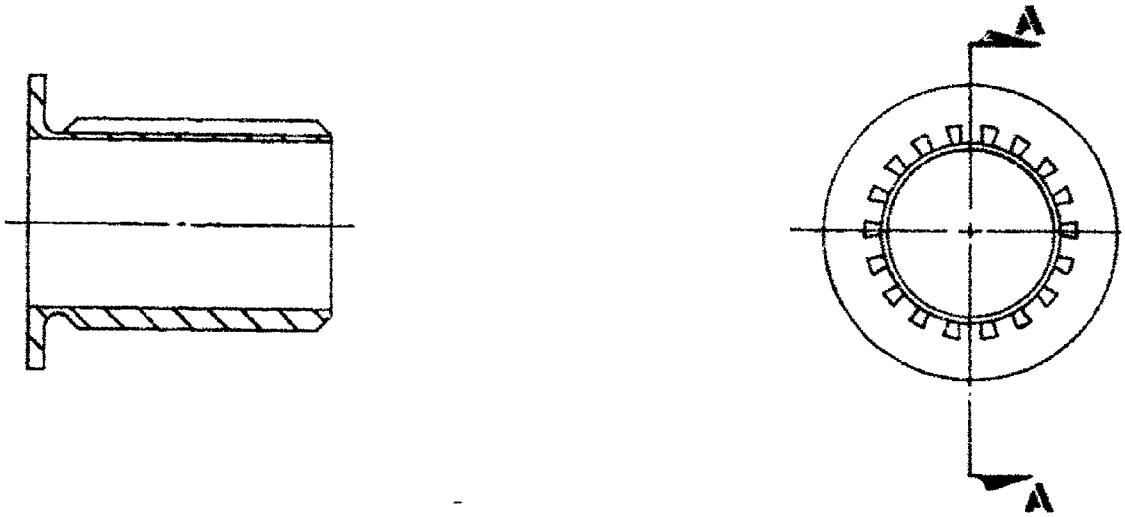

SECTION A-A

Figure 18. Sleeve Insert

D. TEST

1. Test Setup

The space station thruster was tested in the altitude test facility shown in Figure 19, which was equipped with a hardware test cell, an 11,000 cubic foot altitude chamber, and the necessary auxiliary instrumentation, controls, and data recording equipment. The thruster hardware mounted to a test stand designed to measure thrust, as shown in Figure 20. The thruster and stand were installed as a subassembly into the test cell, as shown in Figure 21, where the thruster nozzle was positioned to exhaust into a water-cooled diffuser linking the test cell with the altitude chamber. The diffuser maintained required cell pressure, and ensured that the thruster nozzle flowed full. Propellant supply lines were plumbed to the test cell from a standard GH_2 trailer and a 50 cubic foot, 6000 psi facility gaseous oxygen supply.

The altitude chamber was equipped with two two-stage pump units, each unit being composed of a first-stage reciprocating pump and a second-stage blower. These two units could pump at a combined rate of 4800 CFM to maintain a simulated altitude of 100,000 to 130,000 feet at a maximum continuous thrust of 25 lbf.

2. Instrumentation

The thruster test assembly was instrumented to measure thrust, propellant flowrates, inlet pressures and temperatures, coolant bulk temperature rise, thrust chamber pressure and chamber backside wall temperatures. There were 16 backside thermocouples, located in two rows located 180 degrees apart, the rows being designated "A" and "B." Each row had a thermocouple positioned at eight axial stations along the chamber, thus providing a temperature measurement (A or B) at each axial station, i.e., Station 1, Station 2, ... etc. These axial stations were located according to Figure 22, while the test instrumentation is summarized in Table V.

3. Test Summary

Thruster No. 1 was tested extensively, covering a broad range of mixture ratio (O/F) and percentage fuel film cooling (FFC). Tables VI and VII provide a summary of tests run with regard to O/F and percent FFC, respectively. The thruster was tested from an O/F of 2.2 to 8.1, far exceeding the design range of 3.0 to 5.0. Furthermore, testing covered percent FFC from

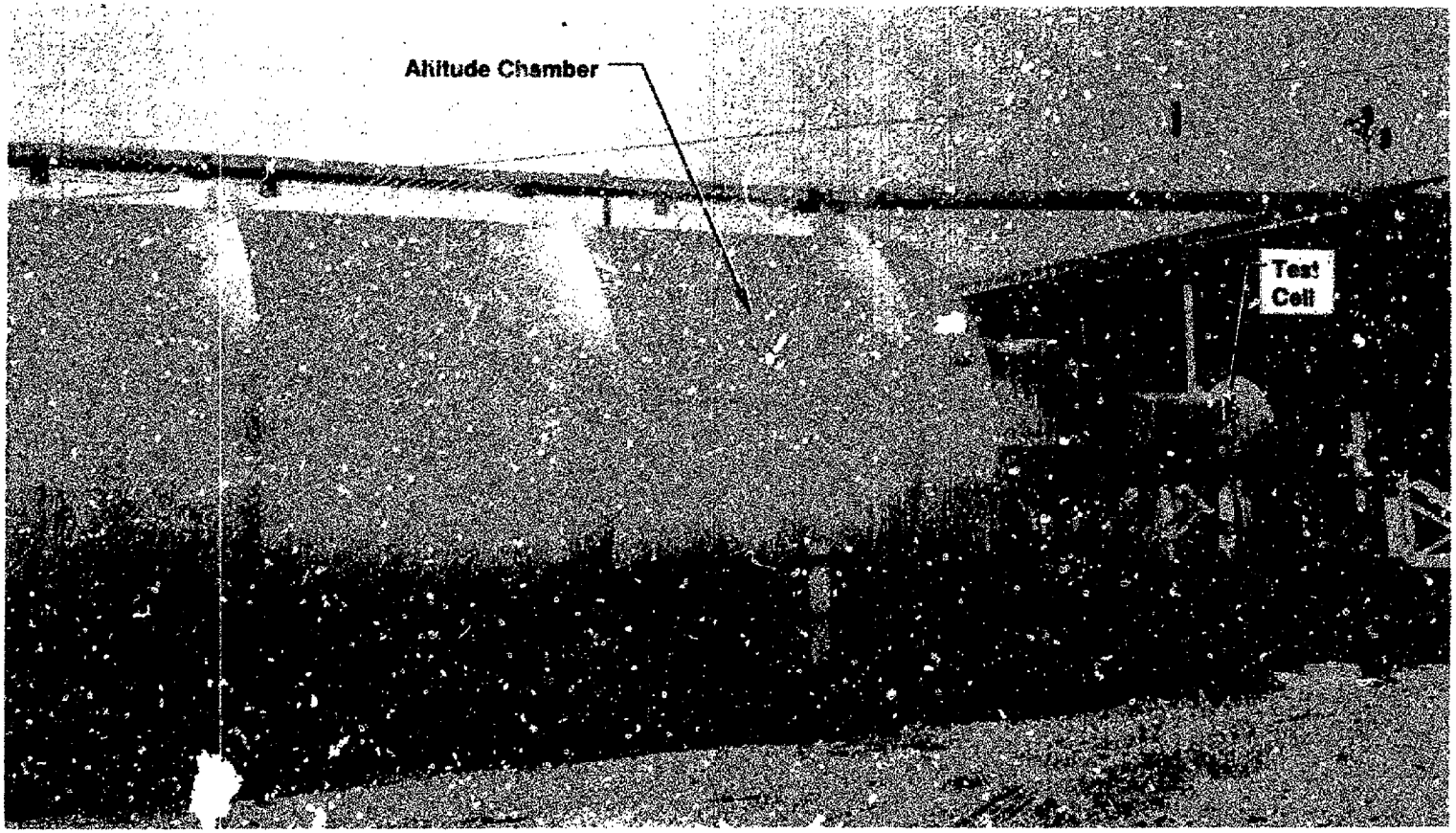

Figure 19. Aerojet Altitude Test Facility for Small Thrusters

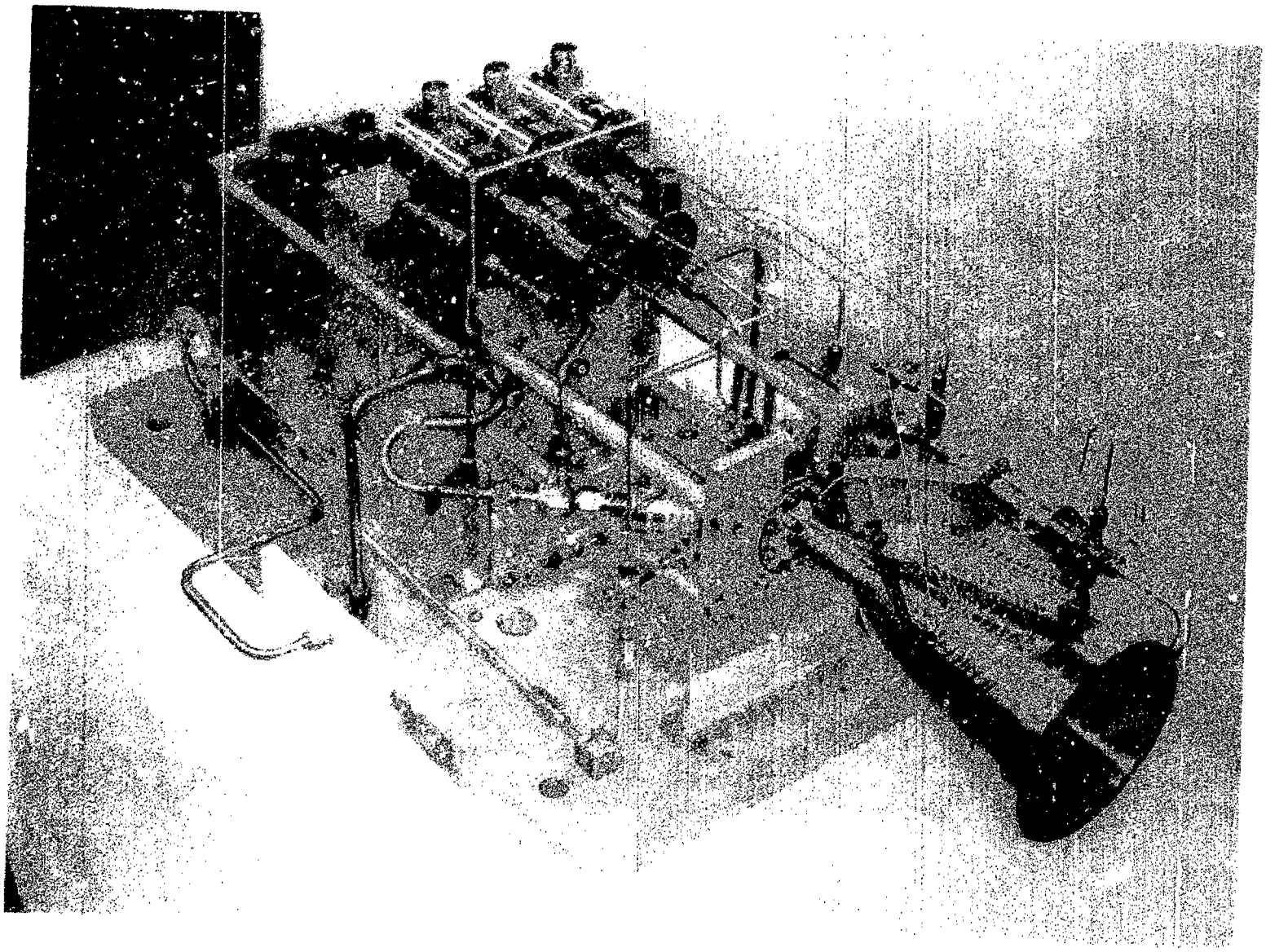

Figure 20. Thruster Mounted to the Thrust Measuring Test Stand

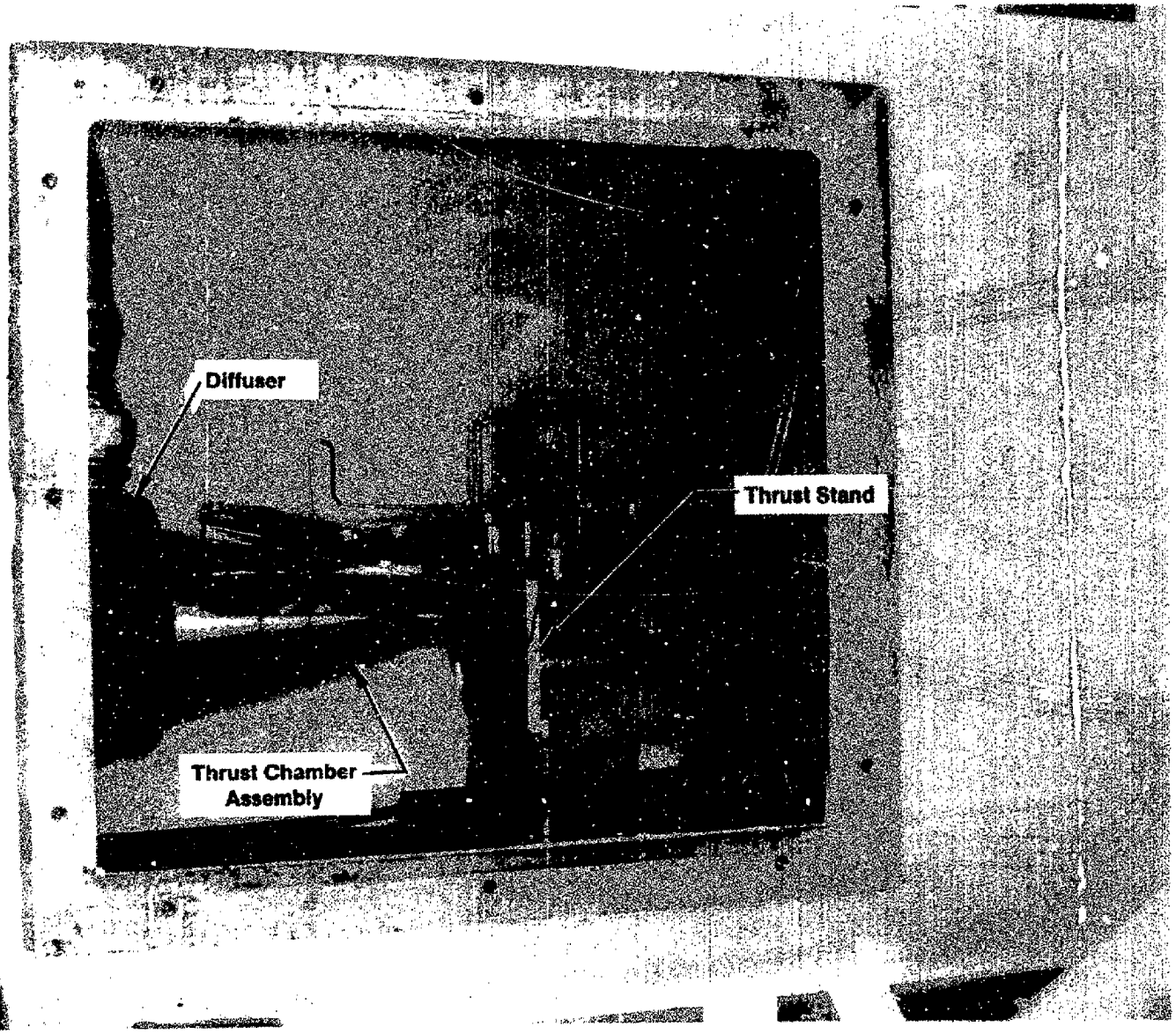

Figure 21. Test Cell with Mounted Test Stand

TC	x (in.)	z (in.)
TCA 1, TCB 1	1.10	-2.50
TCA 2, TCB 2	1.68	-1.92
TCA 3, TCB 3	2.50	-1.10
TCA 4, TCB 4	3.25	-0.35
TCA 5, TCB 5	3.60	0
TCA 6, TCB 6	5.90	2.30
TCA 7, TCB 7	8.30	4.70
TCA 8, TCB 8	10.65	7.05

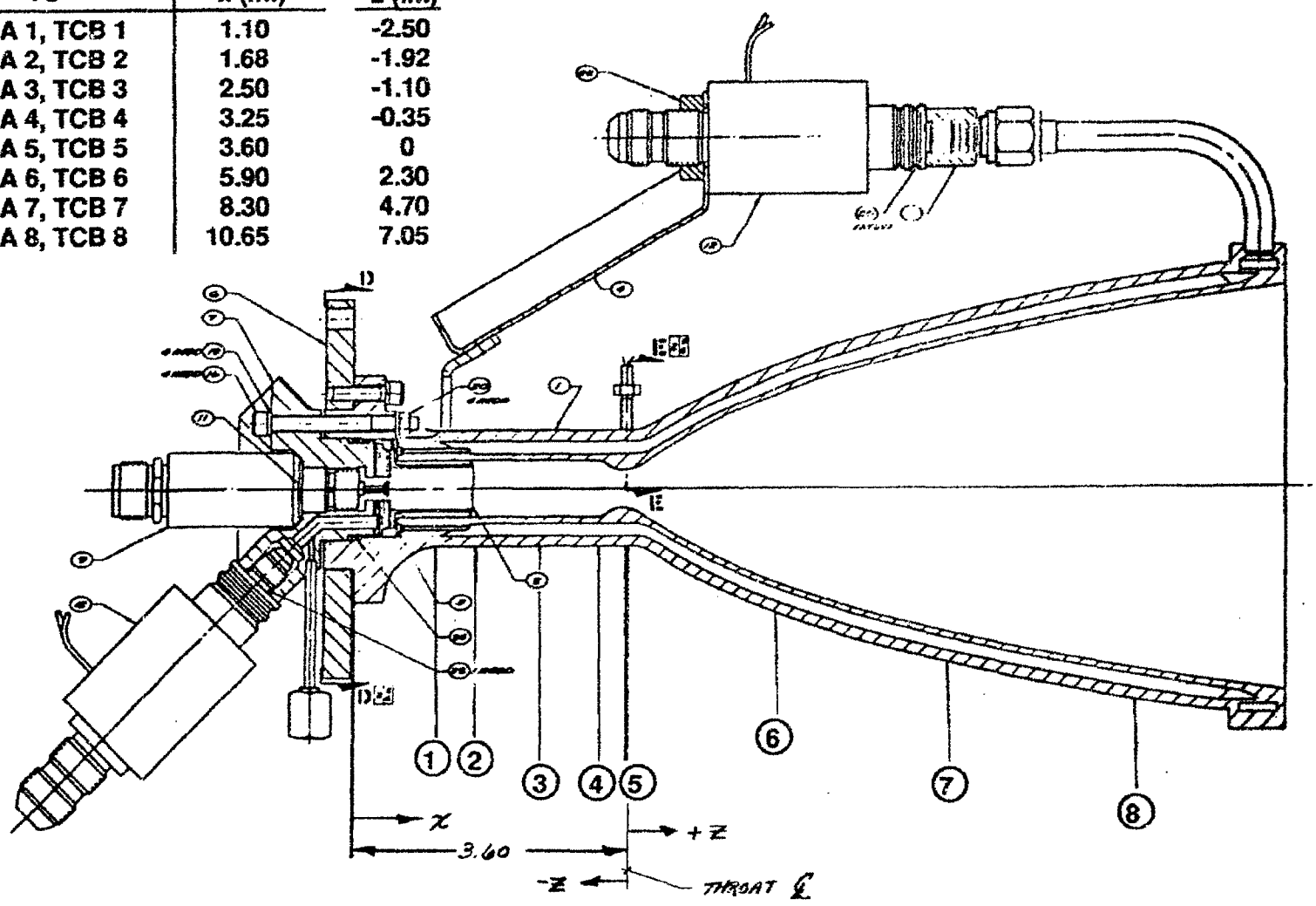

Figure 22. Chamber Thermocouple Location

TABLE V

TEST INSTRUMENTATION
SPACE STATION THRUSTER NO. 1

Parameter	Symbol	Range
Pressure		
Fuel Tank Pressure	PFT	As Required
Fuel Venturi Inlet Pressure	PFVI	As Required
Fuel Thrust Chamber Valve JN	PFTCVI	100 - 300 psia
Fuel Chamber Inlet Pressure	PFCI	80 - 200 psia
Oxidizer Tank Pressure	POT	As Required
Oxidizer Venturi Inlet Pressure	POVI	As Required
Oxidizer Thruster Chamber Valve Injector	POTCVI	100 - 300 psia
Oxidizer Injector Manifold	POJ	75 - 300 + psia
Chamber Pressure	PC	50 - 150 psia
Spark Plug Cavity Pressure	PSPC	50 - 150 psia
Thrust		
Measured Thrust, Bridge A	F_A	15 - 50 lbf
Measured Thrust, Bridge B	F_B	15 - 50 lbf
Propellant Temperatures		
Fuel Venturi Inlet Temperature	TFVI	32° - 2300°F
Fuel Chamber Inlet Temperature	TFCI	32° - 2300°F
Fuel Injector Manifold Temperature	TFJ	32° - 2300°F
Oxidizer Venturi Inlet Temperature	TOVI	32° - 2300°F
Igniter Body Temperature	TBIG	32° - 2300°F

TABLE V

TEST INSTRUMENTATION
SPACE STATION THRUSTER NO. 1
(Continued)

Parameter	Symbol	Range	Location, x (in.)
Chamber Temperature			
Forward Sleeve	TCA1;TCB1	32° - 2300°F	1.10
Sleeve Exit	TCA2;TCB2	32° - 2300°F	1.68
Mid-Barrel Section	TCA3;TCB3	32° - 2300°F	2.50
Convergent Section	TCA4;TCB4	32° - 2300°F	3.25
Throat	TCA5;TCB5	32° - 2300°F	3.60
Forward Divergent Section	TCA6;TCB6	32° - 2300°F	5.90
Middle Divergent Section	TCA7;TCB7	32° - 2300°F	8.30
Aft Divergent Section	TCA8;TC81	32° - 2300°F	10.65

TABLE VI

THRUSTER NO. 1 TEST SUMMARY FOR MIXTURE RATIO RANGE

Mixture Ratio O/F	Total Duration (sec)	Total Impulse (lbf-sec)
2	60	1,302
3	240	5,107
4	3,735	89,526
5	224	5,576
6	221	4,728
7	17,563	428,997
8	155	3,221
Total	22,198	538,457

TABLE VII

THRUSTER NO. 1 TEST SUMMARY FOR PERCENT FUEL FILM COOLING RANGE

Fuel Film Cooling (%)	Mixture Ratio (O/F)		Total Duration (sec)	Total Impulse (lbf-sec)
59	3		60	1,662
	4		980	26,221
	5		55	1,386
	6		19	456
64	3		60	1,602
	4		687	16,458
	5		72	1,749
74	4		1,547	35,949
	5		97	2,441
85	4		271	6,314
	7		17,219	420,063
	8		51	1,056
87	2		60	1,302
	4		120	2,184
	6		120	2,376
	8		66	1,332
88	6		60	1.314
	8		38	833
92	3		120	1,843
	4		130	2,400
	6		22	582
95	7		344	8,934
		Total	22,198	538,457

59 to 95. Appendix B contains a test log and reduced data of all the tests that were run for Thruster No. 1.

4. Experimental Results

The wide range of mixture ratio was incorporated into the test plan after completion of hardware fabrication to demonstrate the feasibility of successfully operating a thruster on the products of water electrolysis (O/F = 8.0). At the time, mission studies showed that additional hydrogen may be available from other sources, such that O/F capability from 4.0 to 8.0 was likely, with the average O/F falling between 4.5 and 5.2. Potentially, only 20 percent of the total impulse may be generated at an O/F of 8.0; nevertheless, most of the impulse (432,000 lbf-sec) for thruster No. 1 was obtained at mixture ratios from 7.0 to 8.0, with the longest firing duration being 2200 seconds at an O/F of 7.5. The thrust chamber showed absolutely no sign of any degradation from the testing.

Thermal data agree reasonably well with predicted values for the thruster design point, indicating that the thermal model was satisfactory. Measured and predicted backside wall temperature profiles were compared at a mixture ratio of 4.0 in Figures 23 and 24 for 60 and 75 percent fuel film cooling, respectively. An excellent correlation existed between predicted and measured values for the diverging section of the chamber. For the converging and cylindrical sections, it appeared that axial conduction averted the highs and lows predicted by the one-dimensional HOCOOL model. In Figures 23 and 24, the maximum measured backside temperature was within a few percent of the average predicted chamber values. Likewise, measured coolant bulk temperature rises were within 10 percent of predicted values.

Additional thermal data are given in Figures 25 and 26. Figure 25 shows maximum backside temperature variations with percent fuel film cooling. Maximum backside temperatures decreased linearly with increasing film cooling and appeared to be much more sensitive to mixture ratio. Figure 21 supported this conclusion of a stronger dependence on mixture ratio than on film cooling. The high mixture ratio (7 to 8) tests were also indicated in Figures 25 and 26, where it was apparent that the wall temperatures were high at these off-design operating points.

The igniter body, oxidizer valve body and thruster mounting plate temperatures were also monitored during testing, never exceeding values of 200°F, 75°F, and 250°F, respectively. These values were maintained regardless of operating point or test duration, even for the

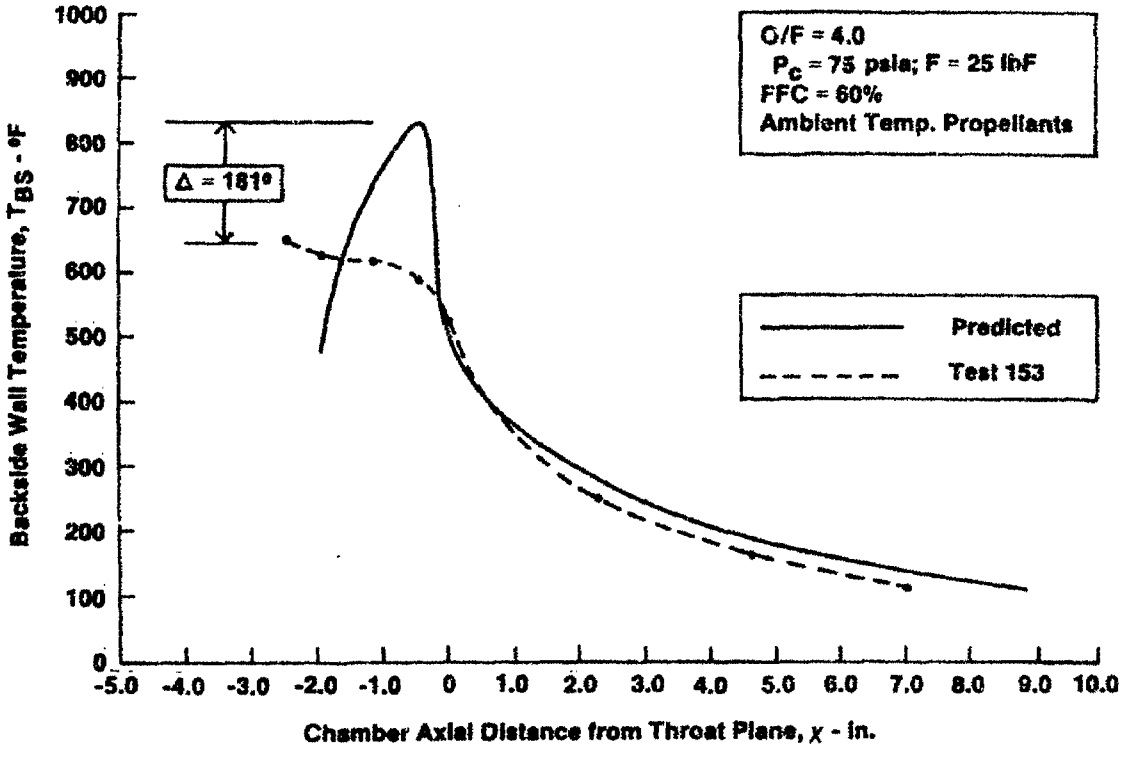

Figure 23. Backside Temperature Profile with 60 Percent FFC

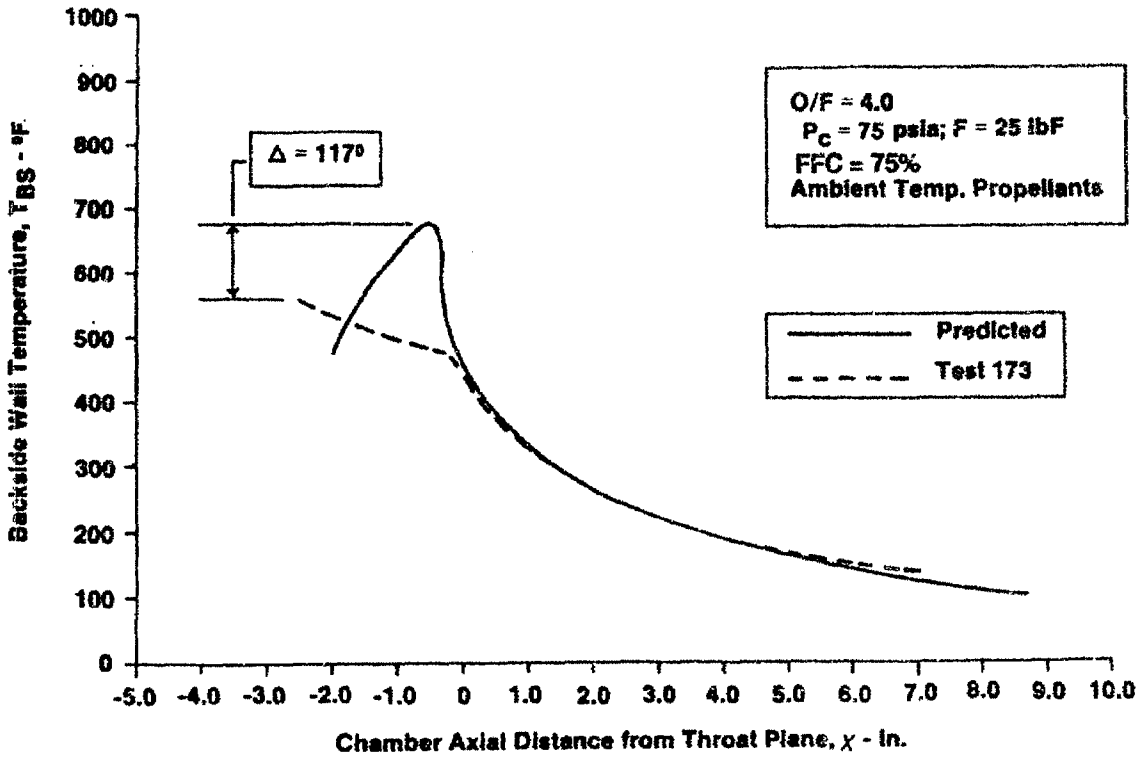

Figure 24. Backside Temperature Profile with 75 Percent FFC

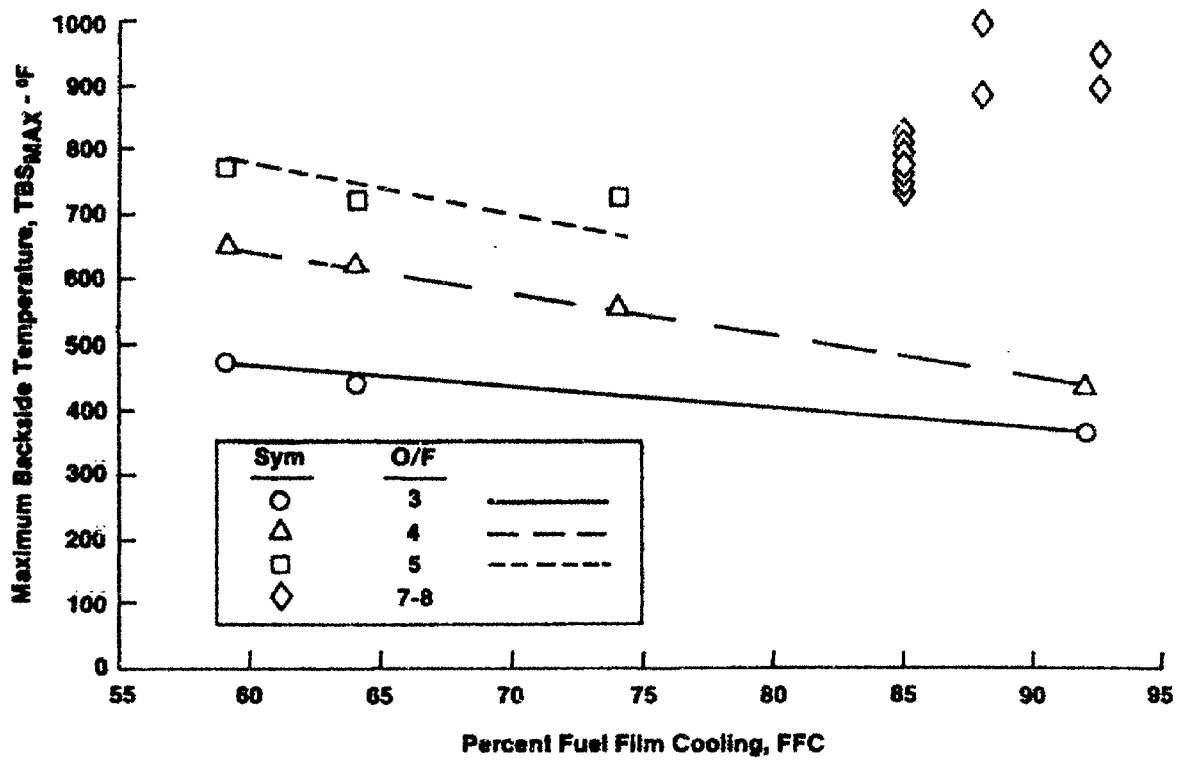

Figure 25. Maximum Backside Temperature Variation with FFC

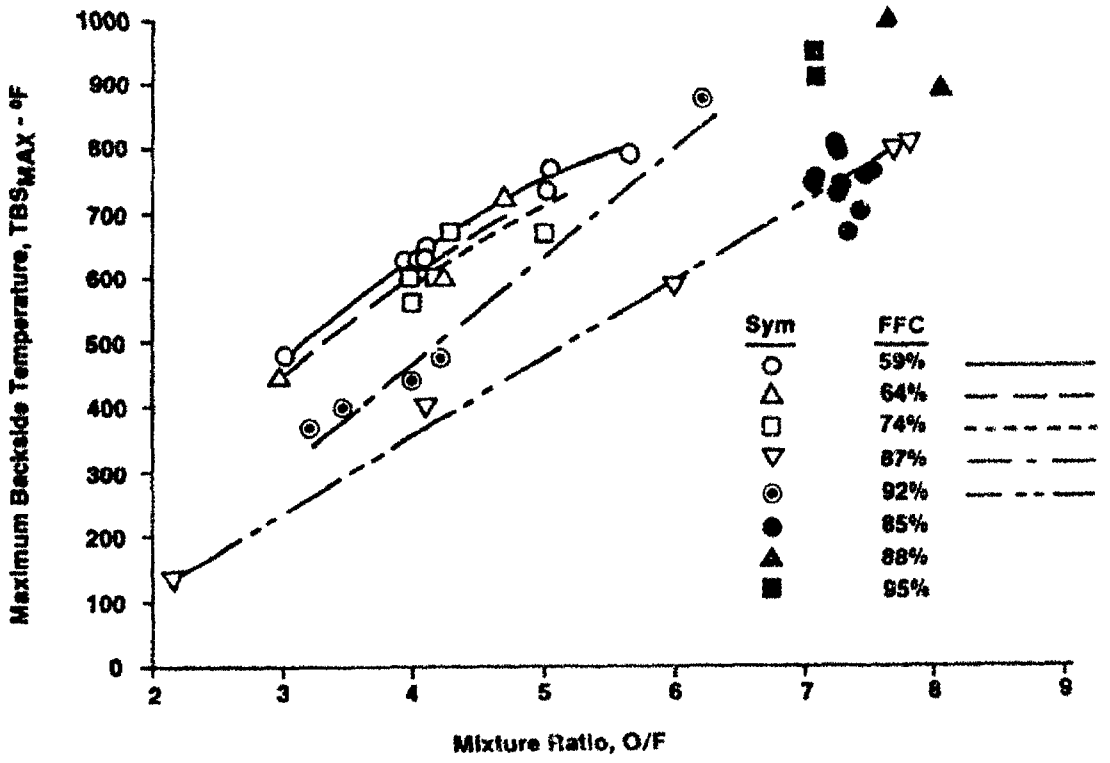

Figure 26. Maximum Backside Temperature Variation with Mixture Ratio

2200 second test previously mentioned. Such low temperatures assure minimum heat rejection to the vehicle.

Performance varied widely with film cooling and mixture ratio, as indicated in Figures 27 and 28; however, variations were linear. Predicted and measured values for performance did not agree as well as for temperature, although the trends were predicted correctly. It appeared that the larger the proportion of hydrogen flowing through the injector, the better the prediction. This condition was attributed to a momentum ratio effect in the core and was influenced by the injector hydraulics. The momentum ratio effect was most pronounced at the off-design operating points for mixture ratios of 7.0 to 8.0. At these high mixture ratios, the hydrogen injection momentum was so low that performance was degraded by 10 to 15 percent. This degradation could be recovered by optimizing the injector hydraulics for the higher mixture ratios.

E. EVALUATION OF RESULTS

In reviewing the experimental results of Thruster No. 1, specifically the measured versus predicted performance values of Figures 27 and 28, there was concern expressed over the apparent disparity in these values. To address this concern, a careful evaluation was performed to document the methodology employed to predict performance, as well as to identify the cause(s) of the performance degradation.

As mentioned previously, the performance predictions were based on measured JPL data which provided the basis for defining a mixing efficiency, E_m. This data was previously given in Figure 8, and was used in determining the percent FFC for the thermal analysis. The E_m values indicated were overall mixing efficiencies, which were influenced by two distinct mixing zones, as shown in Figure 29. The first zone was comprised of 100 percent of the GO_2 and 40 percent (for 60 percent FFC) or perhaps 25 percent (for 75 percent FFC) of the GH_2. The GH_2 impinged normal to the GO_2 flowing through the annulus formed between the spark plug tip and the inner diameter of the platelet stack. These core gases mixed as they flowed along the inner diameter of the sleeve. At the end of the sleeve, the core gases began to be entrained into the FFC exiting the end of the sleeve, thus forming the second mixing zone. These two zones were treated with a two stream tube model, one stream tube being oxidizer-rich and the other being fuel-rich, as discussed in Section III, B, 3.

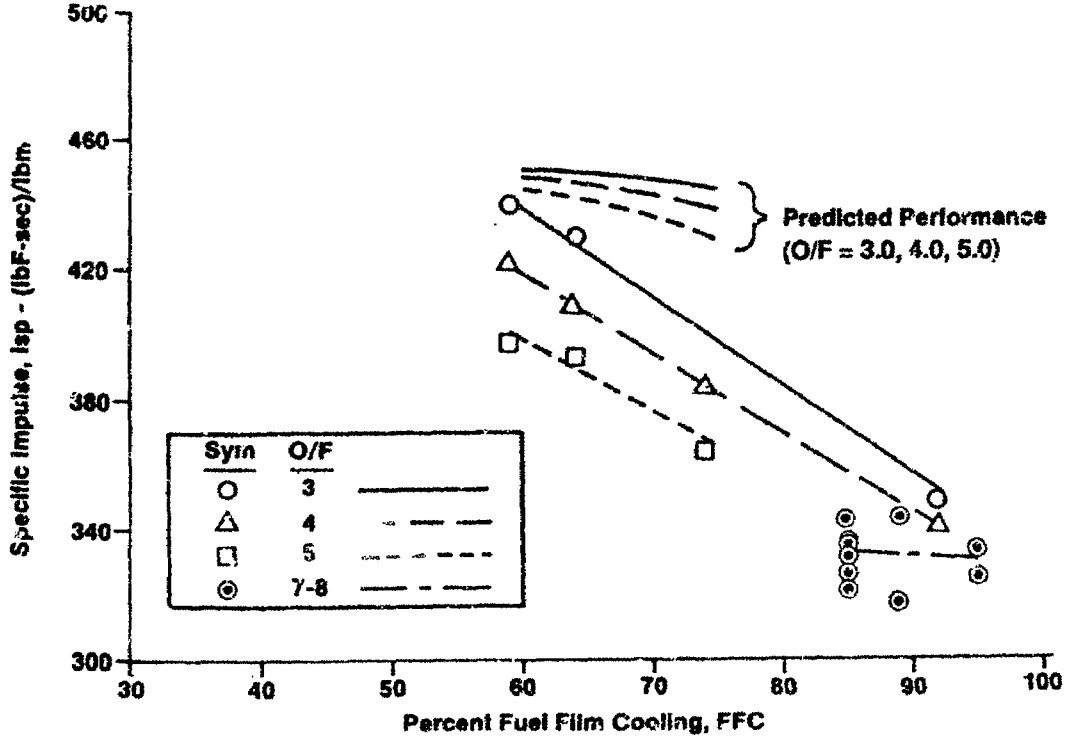

Figure 27. Performance Variation with Percent FFC

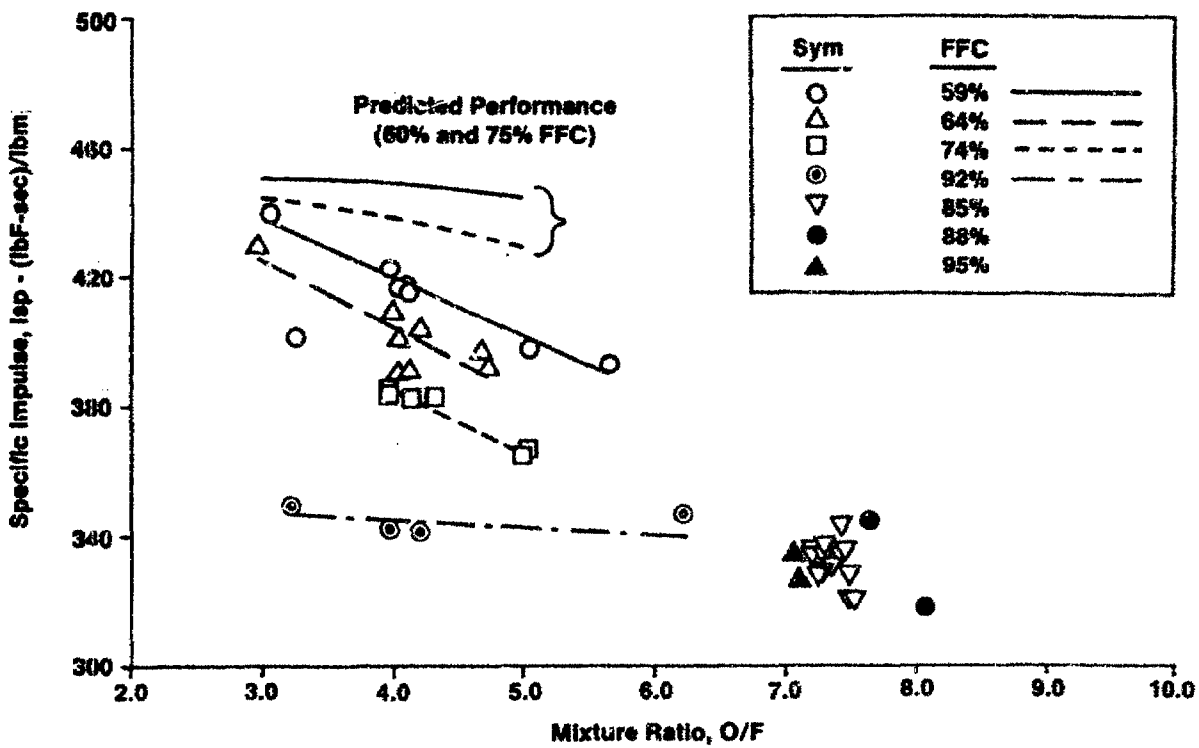

Figure 28. Performance Variation with Mixture Ratio

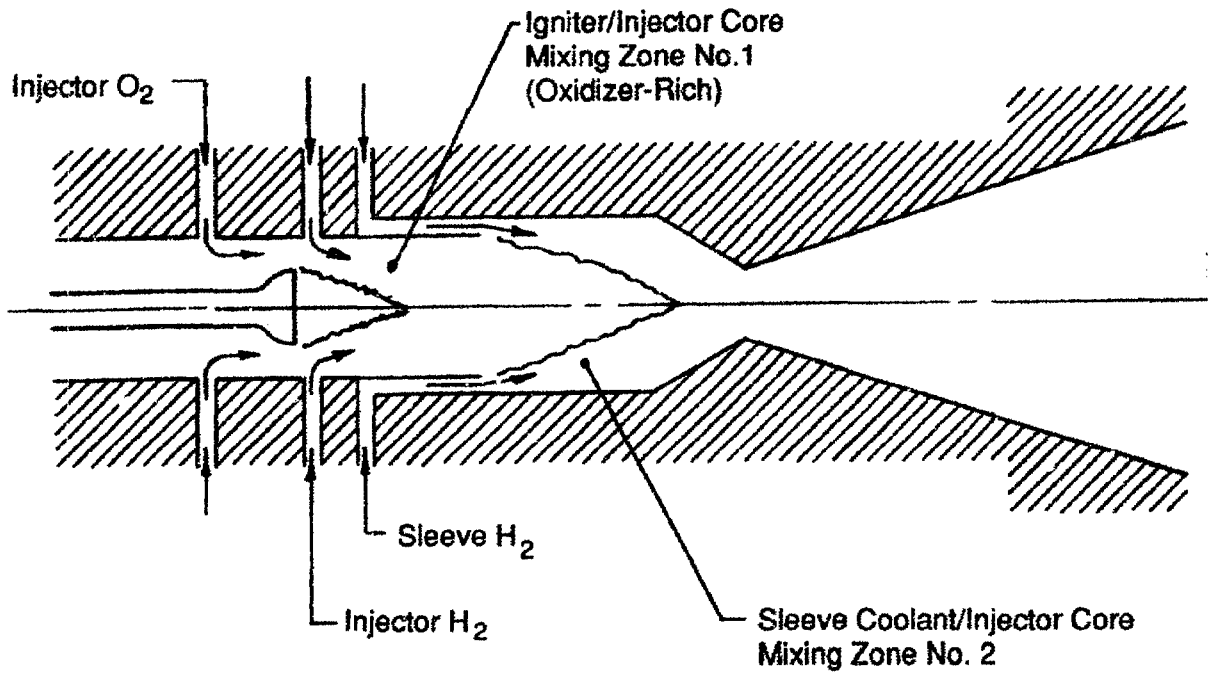

Figure 29. Two Mixing Zones of Thruster Design

III, E, Evaluation of Results (cont.)

The JPL data of Figure 8 defined the trends of combustion efficiency with percent FFC. At an O/F of three (3.0), reasonable combustion efficiencies of approximately 95 percent ($E_m \approx 0.5$) were attained at 60 percent FFC. Even at 90 percent FFC, where the combustion efficiency decreased to approximately 85 percent ($E_m \approx 0.25$), the delivered specific impulse was still 390 to 400 lbf-sec/lbm for the JPL thruster. This performance reduction associated with increased percentage FFC could be caused by either a decrease in the core mixing efficiency or in the core-to-coolant mixing efficiency.

In reviewing Figures 27 and 28 for the performance of the NASA LeRC Thruster No. 1, it is apparent that there was a significant decrease in I_{sp} with increasing FFC and O/F, respectively. Actually, the performance decrease associated with increasing FFC on Thruster No. 1 was greater than observed with the JPL data and greater than predicted. Also, the performance decrease with respect to increasing mixture ratio was dependent upon the percent FFC and was worse than predicted. At high percentages of FFC (~92%), performance was essentially constant for mixture ratios varying from 3.0 to 6.0. The first consideration in understanding these unexpected performance trends was to evaluate the methodology employed in the predictions.

Aerojet has used both the simplified and the rigorous JANNAF methodology for predicting engine performance, these two approaches being outlined in Appendix C. In the case of Thruster No. 1, the pretest performance predictions were based on the simplified JANNAF methodology and the previous JPL design. The performance losses considered included the following:

- Kinetics Efficiency (η_{KN}) - One-Dimensional Kinetics (ODK) Program - tabulated data from 15 degree cones and corrected for throat size.
- Boundary Layer Loss (ΔFBL) - Boundary layer charts from the Turbulent Boundary Layer (TBL) code.
- Divergence Efficiency (η_{DIV}) - Rao nozzle design charts.
- Energy Release Efficiency (η_{ERE}) - Combustion inefficiency due to incomplete mixing before reaching the chamber throat.

III, E, Evaluation of Results (cont.)

Of these losses, the Energy Release Efficiency (ERE) was the least well-characterized for it must account for the intra-core mixing efficiency as well as the core-to-coolant mixing efficiency. Subsequent to Thruster No. 1 testing, analyses were run using test data which determined ERE with respect to O/F. Figure 30 shows ERE plotted as a function of O/F for 59 percent FFC. In addition, curves for ODE, ODK and a perfect injector (ERE = 100 percent) are included in Figure 30. ERE declines significantly with increasing O/F for a fixed FFC of 59 percent, indicating that incomplete propellant mixing was the major cause in the decline of performance at the higher mixture ratios.

The cause(s) of the significant decrease in ERE with increasing O/F was from a decrease in either the core mixing efficiency or the core-to-coolant mixing efficiency. The core to coolant mixing efficiency was determined not to be a contributing factor based on Figure 31. In this figure, ERE was independent of the percentage of FFC and the coolant-to-core velocity ratio, the latter being the significant factor in the mixing efficiency of the core and FFC flows. ERE was highly dependent on O/F, or on the amount of GH_2 flow into the core, i.e., the more GH_2 into the core (lower mixture ratios), the higher the ERE.

Therefore, it was concluded that the mixing efficiency of the core gases was the predominant cause in the degradation of ERE with increasing O/F and that momentum flux ratio ($\rho_F V_F^2/\rho_{OX} V_{OX}^2$) was the primary factor affecting core mixing efficiency. Previous work performed on the Multiple Jet Study[12,13] correlated jet penetration and total mixing (E_T) to operating and design parameters. These correlations, when applied to the Space Station Thruster No. 1, indicated the design did not produce good mixing at higher mixture ratios and percentages of FFC, confirming the aforementioned conclusions. Specifically, Thruster No. 1 had inadequate fuel/oxidizer (H_2/O_2) momentum flux ratio and mixing length to achieve a high mixing efficiency (and ERE) at the higher mixture ratios and percentages of FFC, as was evidenced by Figures 32 and 33. The effect of momentum flux ratio and of FFC on ERE was further highlighted by Figure 34. Appropriate design modifications to improve injector hydraulics (H_2/O_2 momentum flux ratio) and effective mixing length would improve the mixing efficiency of the core and thereby improve the ERE (I_{sp}) of the thruster at the higher mixture ratios and percentages of FFC.

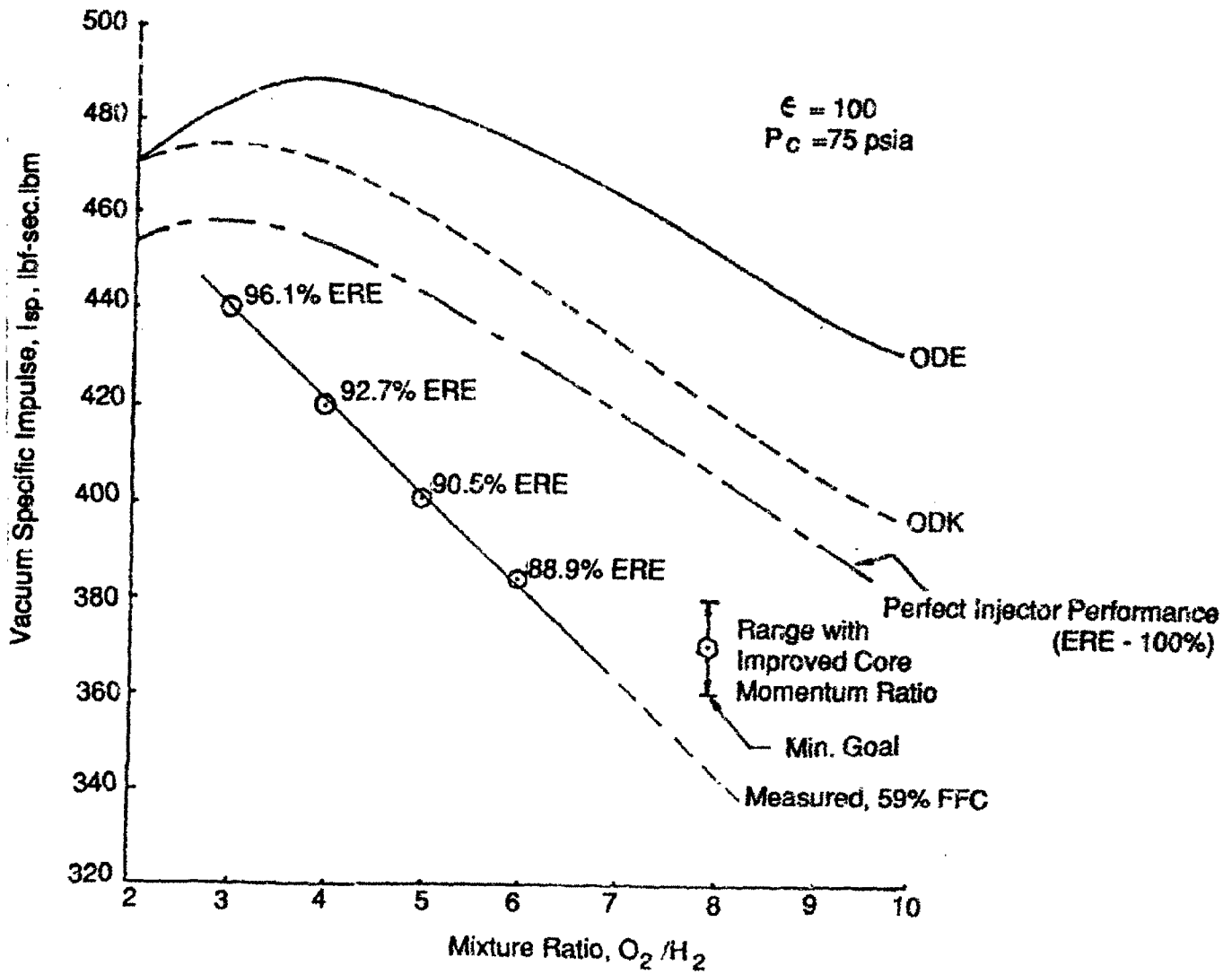

Figure 30. Energy Release Efficiency and Specific Impulse Trends with Increasing O/F

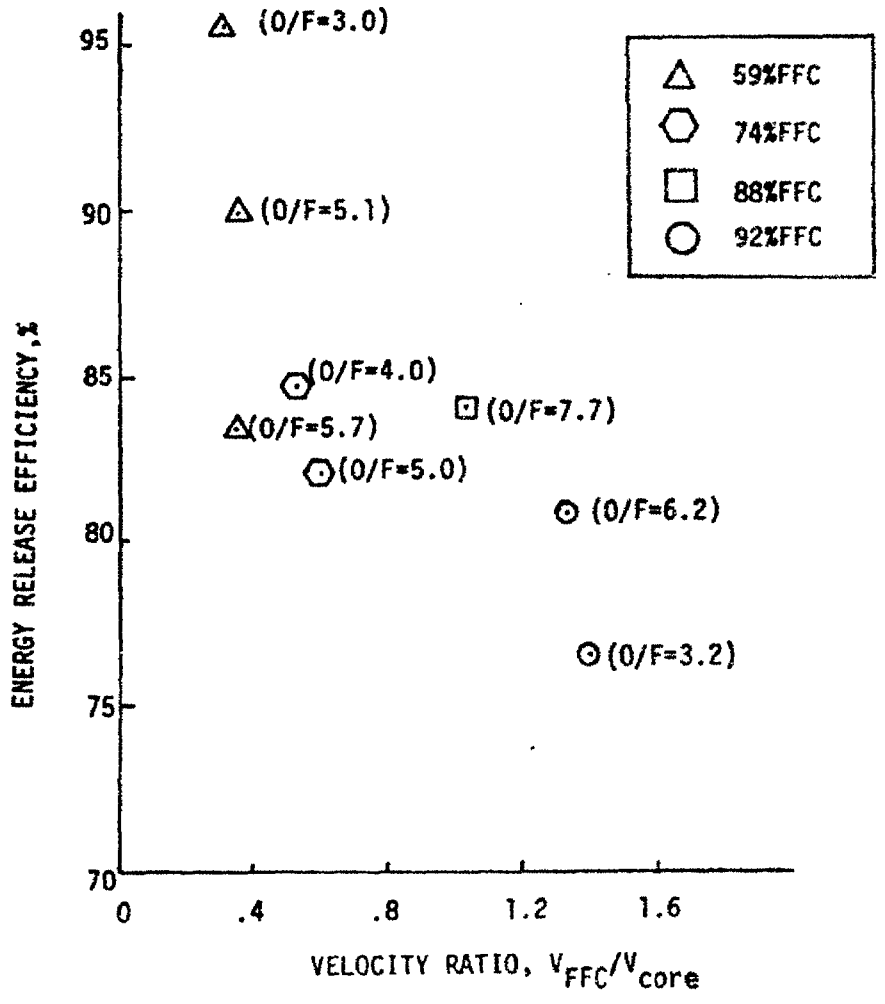

Figure 31. Energy Release Efficiency for Constant %FFC and Velocity Ratio

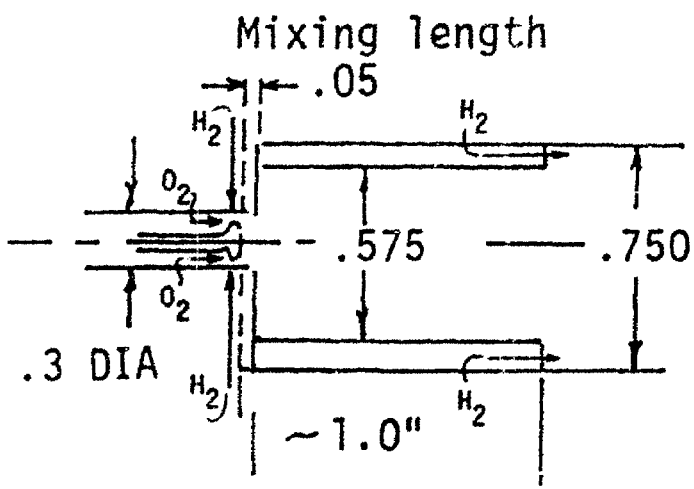

OPERATING CONDITION

	59% FFC		92% FFC	
O/F	3.0	6.0	3.0	8.0
$\frac{(\rho v^2)_{H_2}}{(\rho v^2)_{O_2}}$	17.0	6.0	1.2	0.3

Figure 32. Current Space Station Thruster has Inadequate H_2/O_2 Monmentum Flux Ratio and Mixing Length for Core Flow at High Mixing Ratio

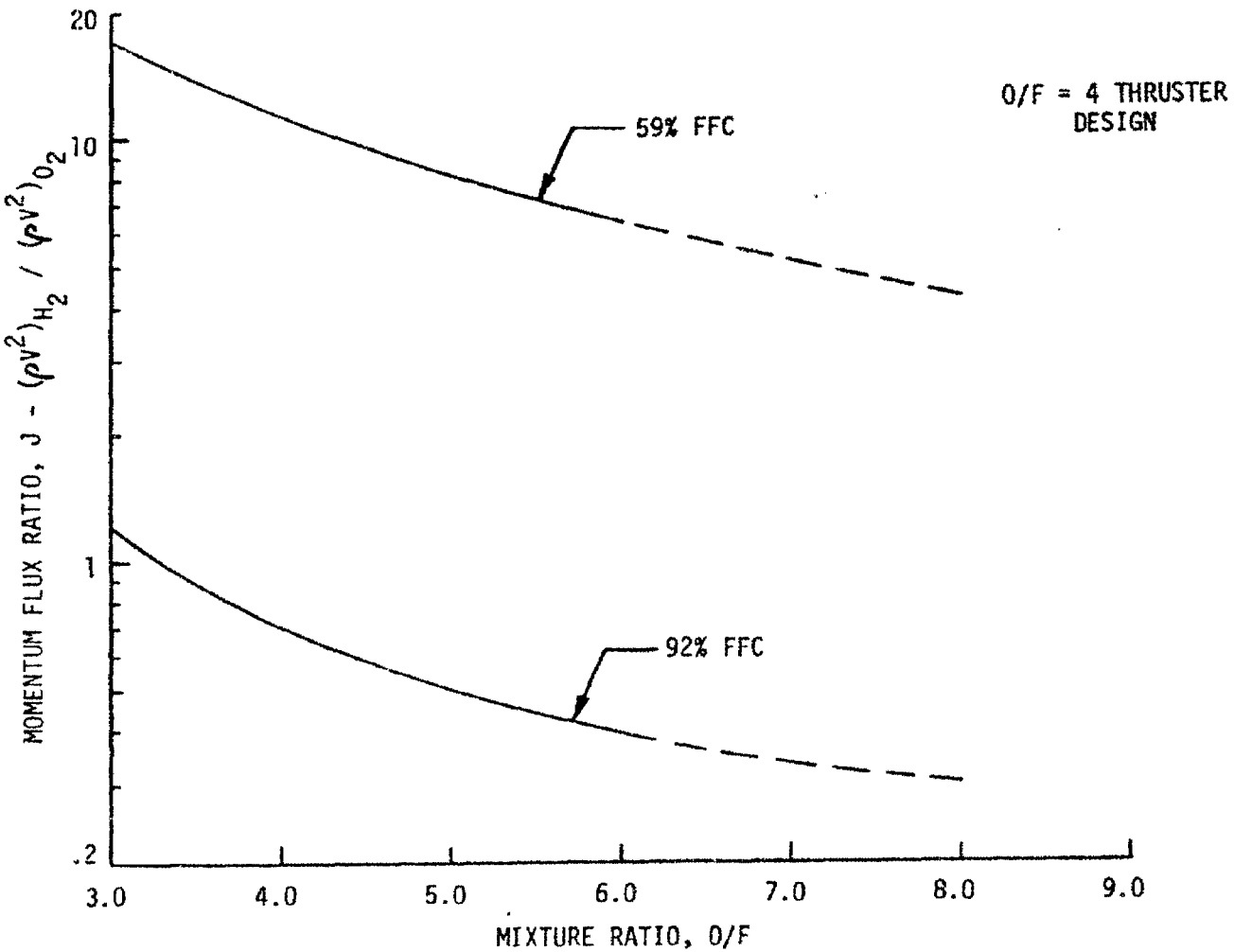

Figure 33. Momentum Flux Ratio for Different %FFC and O/F

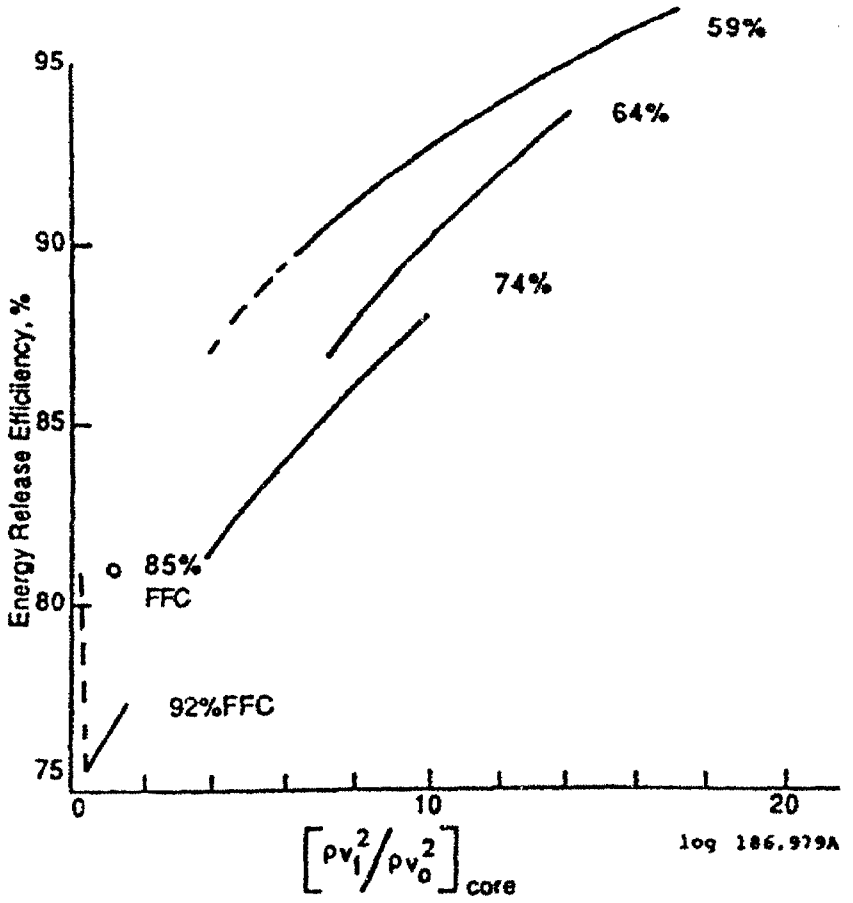

Figure 34. ERE for Increasing %FFC and Momentum Flux Ratio

F. CONCLUSIONS

The technology for a 25 lbf GO_2/GH_2 thruster for Space Station propulsion was successfully demonstrated. Based on a previously proven igniter concept, a good thruster design approach was confirmed through extensive hot-fire testing, which covered mixture ratios from two (2.0) through eight (8.0) and FFC from 59 to 92 percent. The corresponding data base provided a substantial foundation upon which to evaluate the thruster operation and to establish the key design parameters affecting thruster performance. An optimized thruster for successful O/F = 8.0 operation could now be designed.

IV. SPACE STATION THRUSTER NO. 2

A. DESIGN APPROACH

1. Design Background

The design and the test results from Thruster No. 1 formed the basis from which Thruster No. 2 was designed. Figure 30 indicated that a minimum ERE of 96 percent was required to obtain good performance (I_{sp}). In addition, Figures 32, 33, and 34 showed that a momentum flux ratio of 17.0 corresponded to the desired 96 percent ERE (O/F = 3.0 and FFC = 59%). Therefore, Figure 35 was prepared to relate the Thruster No. 1 test data with another mixing efficiency parameter, E_T, defined in References 12 and 13. This E_T parameter was directly related to the previously discussed momentum flux ratio, J, within the injector core. An E_T of 60 percent corresponded to an ERE of 96 percent (O/F = 3.0 and 59 percent FFC). Therefore, J and E_T became the guiding parameters for the design of the injector hydraulics to assure good core mixing. Specifically, a minimum value of 20 was established for J, and E_T had to surpass 60 at an O/F of 8.0, for design purposes

2. Design Concept

The design concept was not changed for Thruster No. 2, because the concept was believed to be a good one; however, Thruster No. 2 was modified based on Thruster No. 1 test results and optimized for O/F = 8.0. For such an overall mixture ratio (8.0), the core mixture ratio was 20.0 for 60 percent FFC. The Thruster No. 2 assembly is shown in Figure 36.

There were seven significant modifications implemented in the design of Thruster No. 2 and these modifications were as follows:

(1) Decreased potential flow expansion area ratio (ε) from 100:1 to 30:1 — lowered coolant bulk temperature rise and lowered fabrication costs;

(2) Increased the number of chamber coolant channels from 24 to 32 — improved chamber cooling;

(3) Changed coolant channel geometry to permit variable depth channels so that coolant velocity could be increased at high heat flux locations — improved chamber cooling;

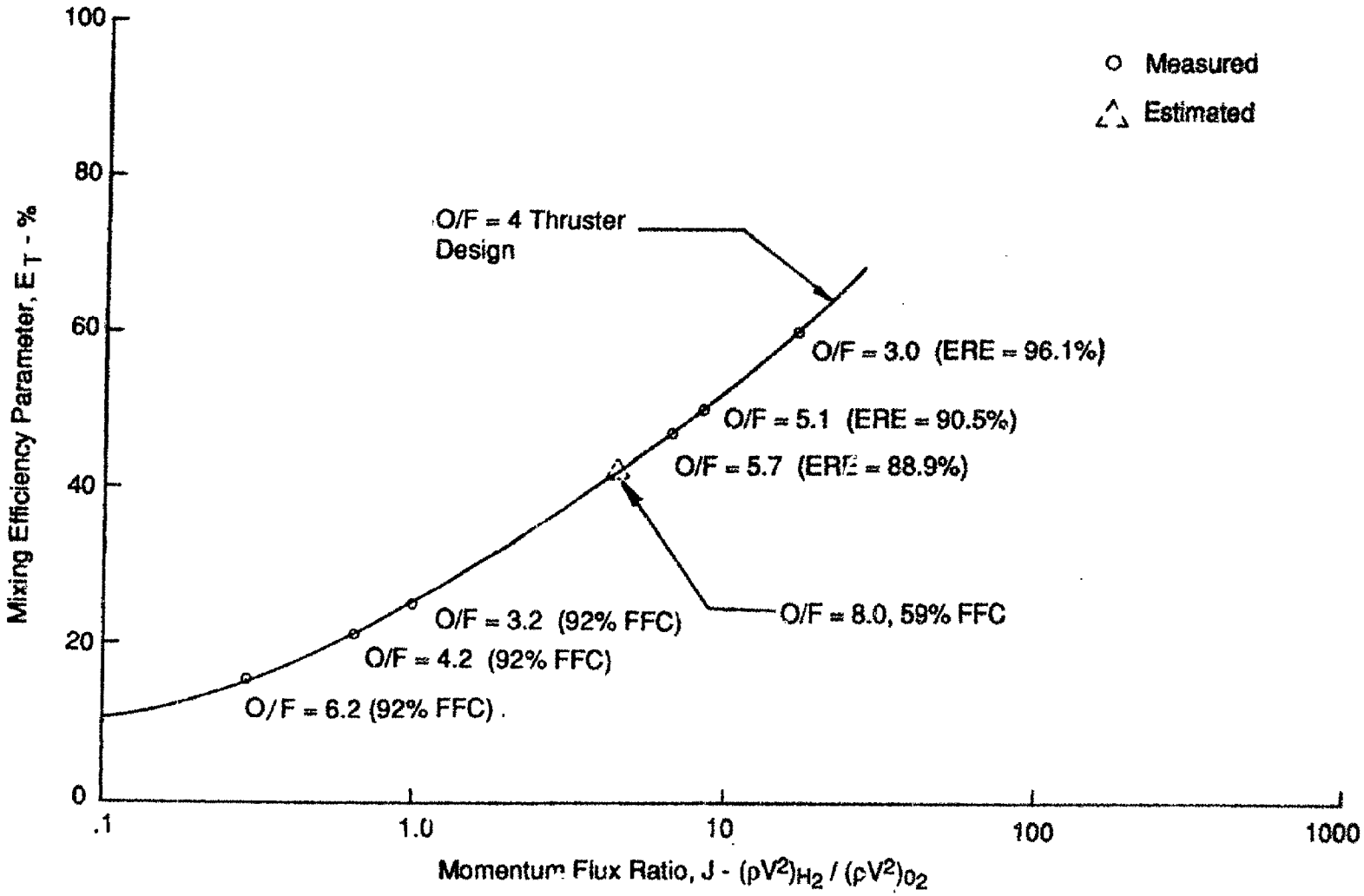

Figure 35. Mixing Efficiency, E_T, for Thruster No.1

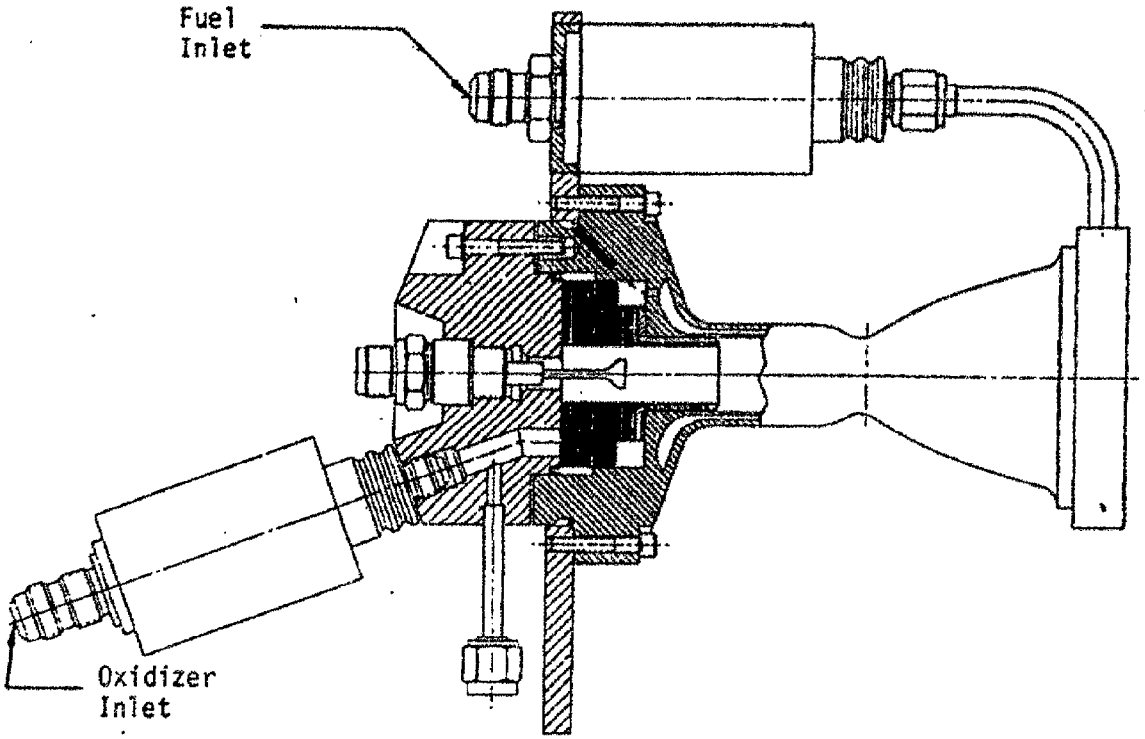

Figure 36. Thruster No.2 Assembly

IV, A, Design Approach (cont.)

(4) Increased chamber contraction area ratio (ε_c) from 2.25 to 4.00 — increased inner surface area, thus lowering effective heat flux;

(5) Reduced chamber gas-side wall thickness from 0.080 to 0.040 inches — improved chamber cooling;

(6) Changed injector hydraulics to provide a minimum fuel-to-oxidizer momentum flux ratio of 20 — improved injector core mixing and thruster performance;

(7) Removed rearward facing step between injector and sleeve — improved injector core mixing and thruster performance.

The initial five modifications were incorporated in the chamber design; the latter two modifications were incorporated into the injector and sleeve designs, with the seventh modification depicted in Figure 37. Based on the design changes implemented, Figures 33 and 35 were updated as Figures 38 and 39, respectively, indicating that the injector hydraulics would provide the desired core mixing.

3. Design Point

The design point for Thruster No. 2, based on the new contract requirements of Table II, were contrasted with the design point of Thruster No. 1 in Table VIII. This design point was compatible with the requirement for water electrolysis generated propellants, namely O/F = 8.0 operation.

B. DESIGN ANALYSIS

1. Ignition Analysis

The same type of ignition analysis was performed for Thruster No. 2 as was performed for Thruster No. 1. This analysis resulted in the spark igniter operating characteristics of Table IX.

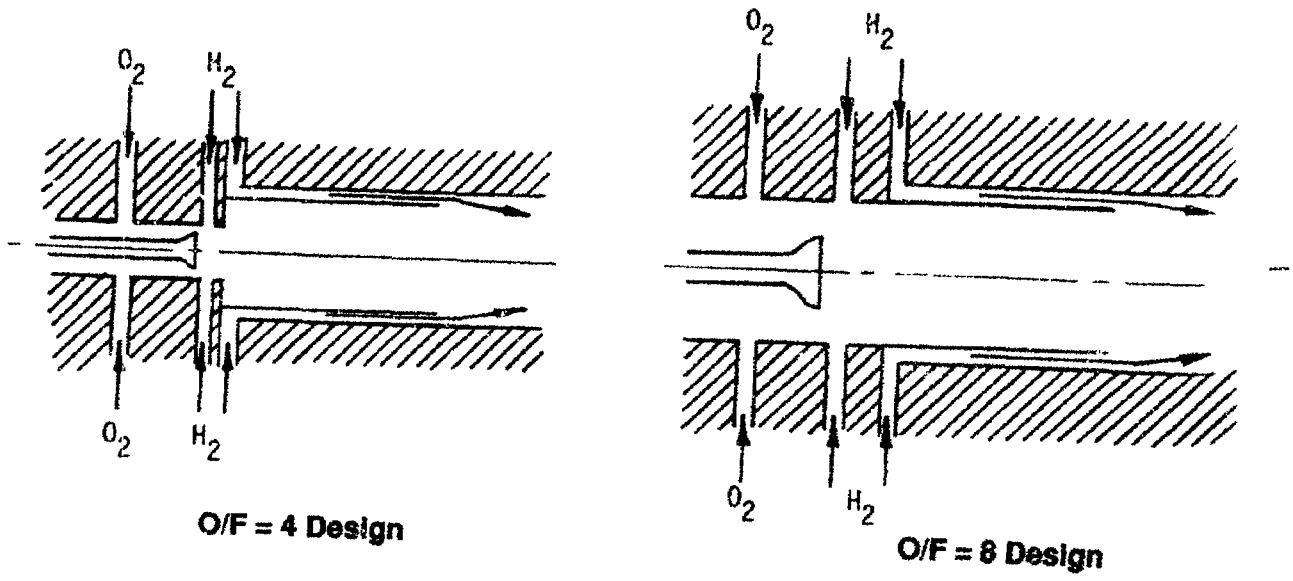

Figure 37. Redesign of Injector / Sleeve Interface

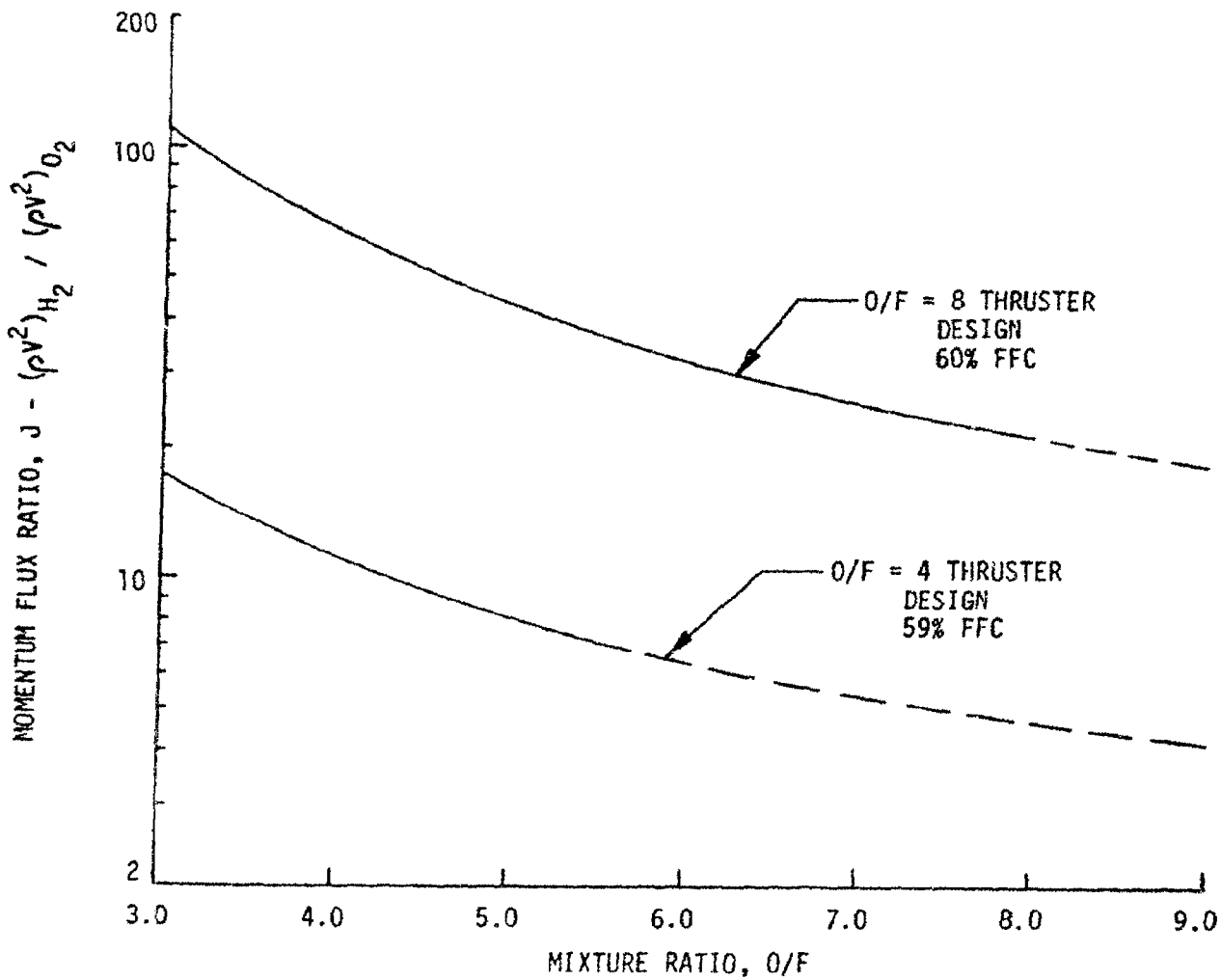

Figure 38. Momentum Flux Ratio Compared for Thruster Nos. 1 and 2

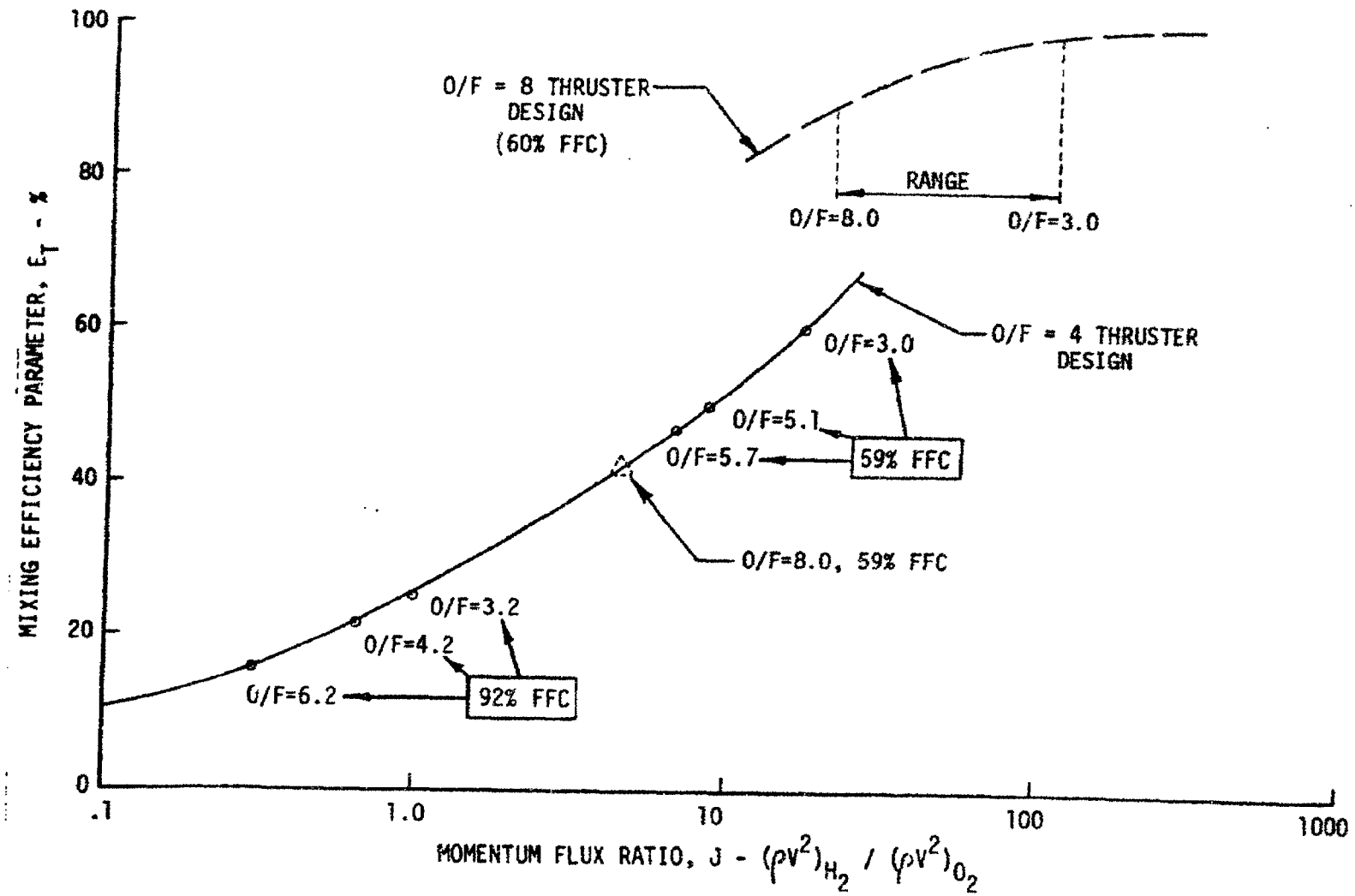

Figure 39. Mixing Efficiency, E_T, Compared for Thruster Nos. 1 and 2

TABLE VIII

DESIGN POINTS, NASA LeRC SPACE STATION THRUSTERS

Parameter	Thruster No. 1 First Generation	Thruster No. 2 Second Generation
Thrust, F-lbf	25	25
Chamber Pressure, Pc-psia	75	75
% FFC	75	60
Overall Mixture Ratio, MR	4	8
Core Mixture Ratio, MR_{CORE}	16	20
Fuel Inlet Temperature, TFI-°R	200 - 530	200 - 530
Oxidizer Inlet Temperature, TPI-°R	300 - 530	300 - 530
Throat Diameter, D_T-in.	.500	.500
Chamber Diameter, D_C-in.	.750	1.000
Contraction Area Ratio, ε_c	2.25	4.00
Expansion Area Ratio, ε	100	30
Chamber Length, L', in.	1.925	2.000

TABLE IX

SPACE STATION THRUSTER NO. 2
SPARK IGNITER OPERATING CHARACTERISTICS

Spark Igniter Energy, mJ	10 min
Spark Rate, SPS (Hz)	60 min.
Spark Gap, in.	0.200
Igniter Sleeve I.D., in.	0.810
Breakdown Potential, Volts	40,000
Minimum Ignition Pressure, psia	3.70
Maximum Ignition Pressure, psia	36.0
Predicted Nominal Cold Flow Pressure, psia	22.4

IV, B, Design Analysis (cont.)

2. Thermal Analysis

The same thermal model was utilized during the design of Thruster No. 2, which required the input of the two empirical constants previously mentioned in Section III, B, 2. These constants, C_{gn} and Km (formerly KSO), were still based on the aforementioned JPL data. A gas-side temperature profile was predicted for the nominal chamber pressure (75 psia), depicted in Figure 40. In addition, temperature profiles were prepared for 40 percent (30 psia) and 135 percent (101 psia) of nominal chamber pressure (75 psia), presented in Figures 41 and 42, respectively. These three cases were at a mixture ratio of eight (8.0) and 60 percent FFC.

3. Performance Analysis

The output from the thermal mixing model was used to establish the characteristics of the two stream model used in the performance model. The performance analysis accounted for two-dimensional effects, as well as kinetics, divergence and boundary layer losses. The performance prediction was documented in Table X for the design point. Performance predictions for the thruster operating range were made, as displayed in Figure 43. The performance improvement for higher area ratios was determined and presented in Figure 44.

4. Chamber Life Analysis

The temperature differential through the chamber wall was predicted to be about 100°F, which was very small. The associated thermal strain range was predicted to be on the order of 0.2 percent. Such a small thermal strain range gave a low cycle fatigue (LCF) life in excess of 10,000 cycles according to the Manson-Halford method of universal slopes[11]; therefore, LCF was considered to not be an issue. The design also surpassed the minimum criteria for creep rupture; consequently, the life limiting case would be high cycle fatigue (HCF).

C. DESIGN DESCRIPTION AND FABRICATION

The Thruster No. 2 design was similar to Thruster No. 1 and consisted of three major components: the thrust chamber, the sleeve insert, and the integral igniter injector. The thrust chamber was made of an axially slotted zirconium-copper (ZrCu) liner that had an electroformed nickel (EFNi) outer jacket. This EFNi outer jacket closed out the 32 chamber coolant channels and provided the structural support for the ZrCu liner. The diverging section of the chamber was

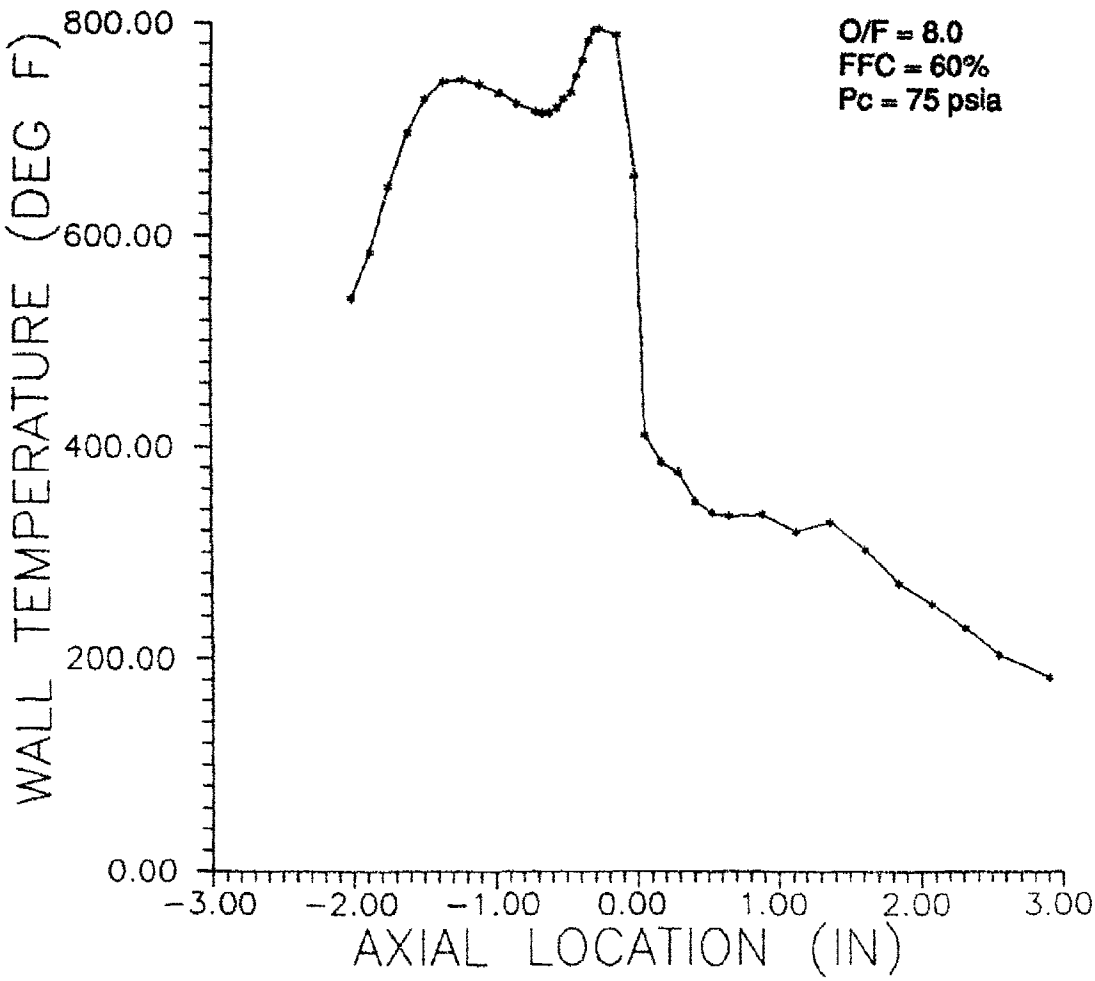

Figure 40. Predicted Gas-Side Wall Temperature Profile for Nominal Chamber Pressure

TABLE X

DESIGN POINT PERFORMANCE PREDICTION FOR THRUSTER NO. 2

- Nozzle contour (potential flow) is optimized at $\varepsilon = 30:1$ for 85% bell.
- Boundary layer displacement thickness is accounted for by the geometric nozzle contour.

MR = 8, FFC = 60%

	Turbulent	Laminar
ODK	384.3	
ODE	406.0	
% Kin	94.655	
TDE	404.0	
TDE * % Kin	382.4	
97% ERE	370.9	370.9
BLM Losses	9.9	7.6
Isp*	361.0	363.3

* Isp for a perfect injector is approximately 387.

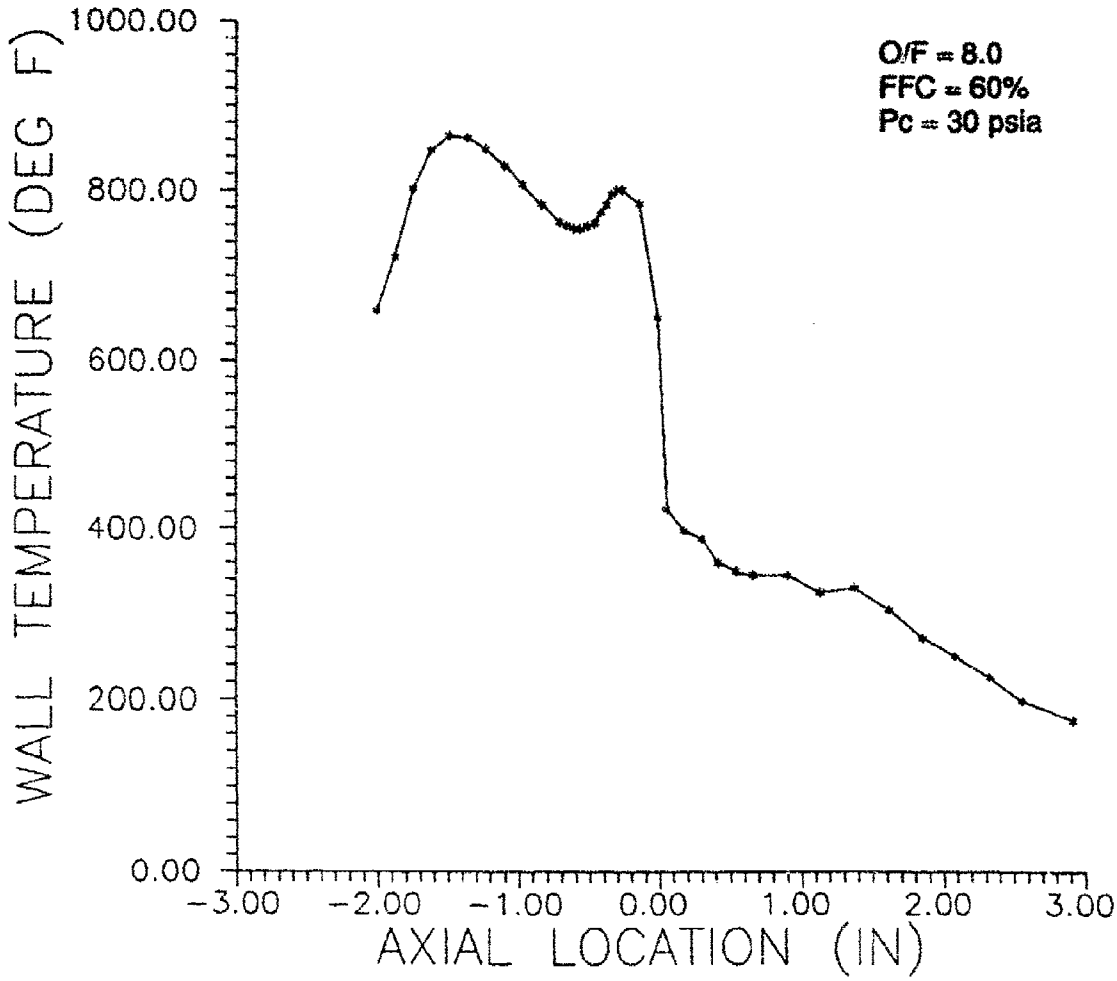

Figure 41. Predicted Gas-Side Wall Temperature Profile for 40 Percent of Nominal Chamber Pressure

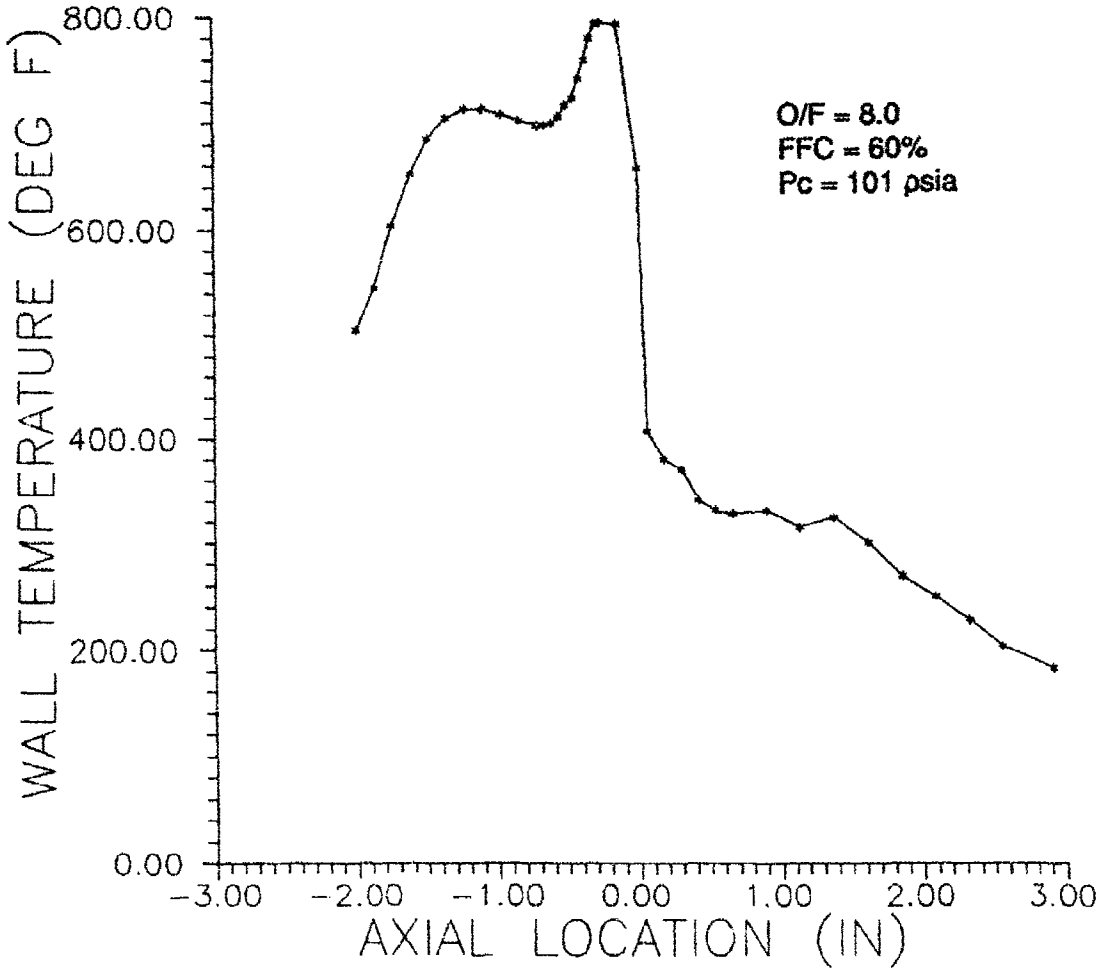

Figure 42. Predicted Gas-Side Wall Temperature Profile for 135 Percent of Nominal Chamber Pressure

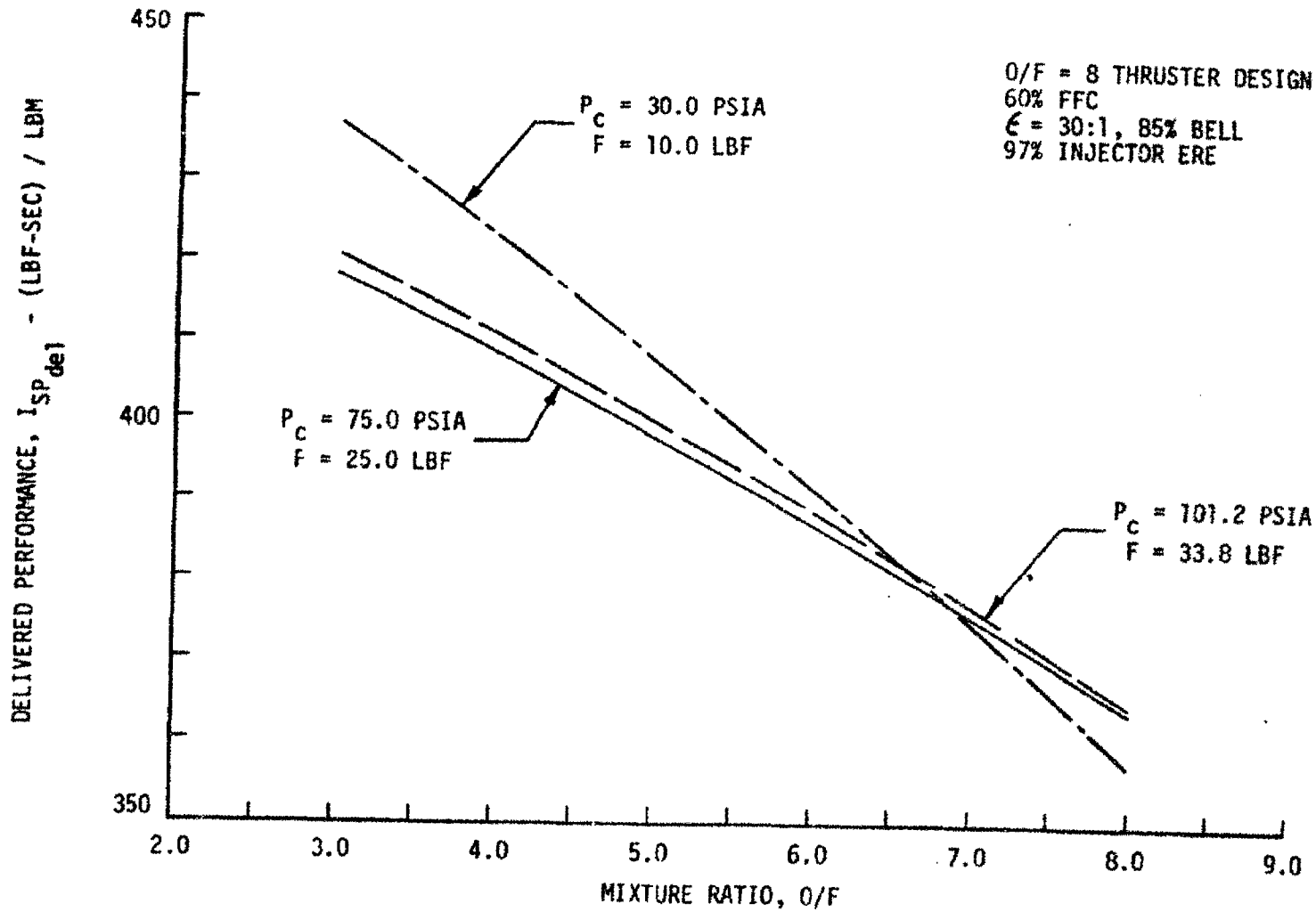

Figure 43. Performance Predictions for Operating Range of Thruster No. 2

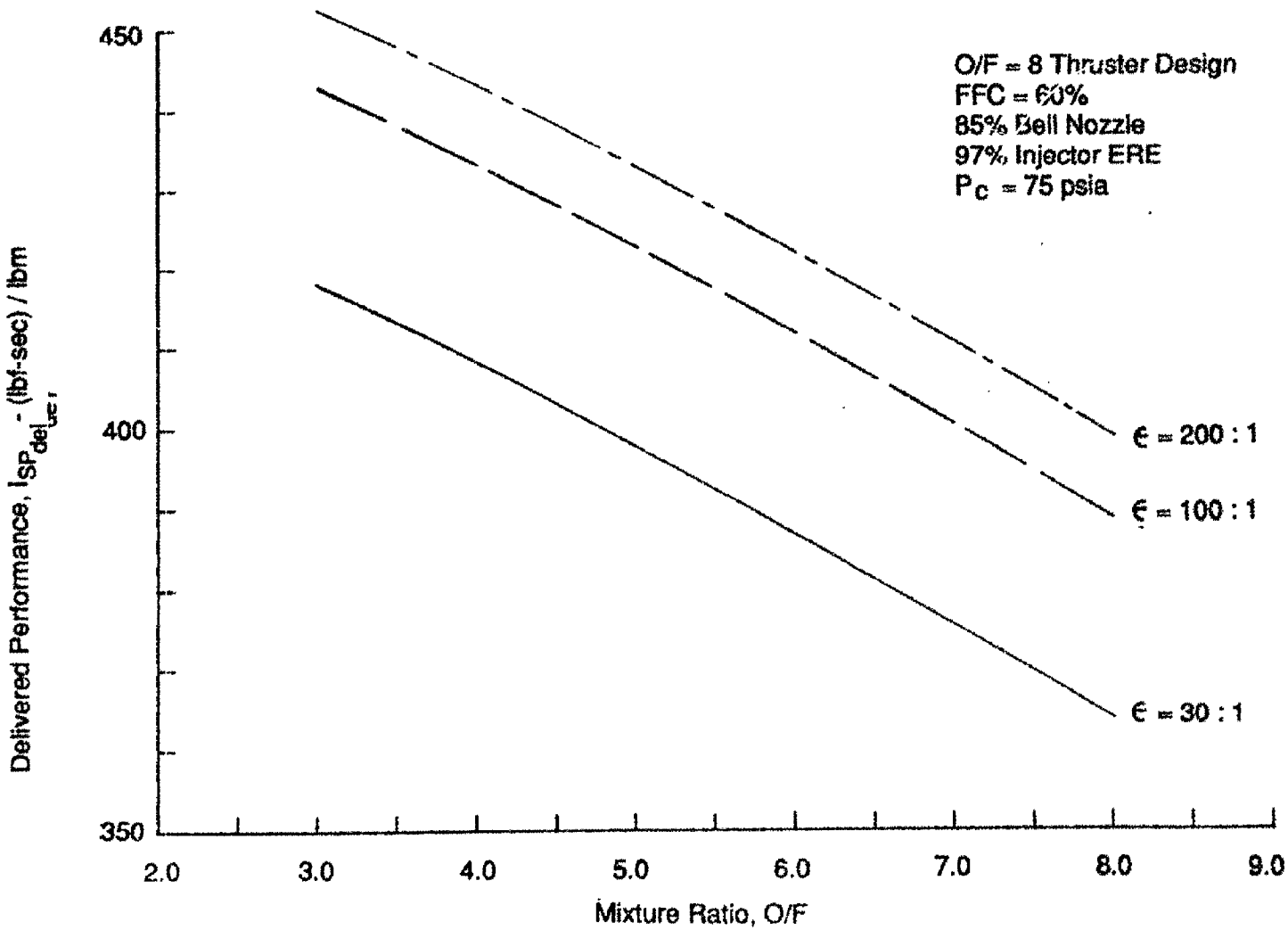

Figure 44. Effects of Nozzle Extensions on Delivered Performance

an optimized Rao contour (85 percent bell) with a potential flow expansion area ratio of 30:1. Figure 45 shows the machined chamber liner.

The sleeve insert was similar to the one for Thruster No. 1 pictured in Figure 18. This insert was designed to fit into the forward end of the thrust chamber. A flow-balancing washer divided the fuel (GH_2) flow that exits the chamber coolant channels between the injector (40 percent) and the sleeve (60 percent). The sleeve was machined from nickel (Ni-200) and had 30 axial slots milled on the outer diameter for regenerative cooling and axial FFC injection.

The integral igniter injector consisted of a machined stainless steel igniter body and a Ni-200 platelet injector. Propellant distribution and metering occurred within the photochemically machined flow passages of the individual injector platelets. These individual platelets were diffusion-bonded to form a homogeneous structure which became the injector. This injector was brazed to the igniter body to complete the assembly. Provisions were made within the igniter body to mount the spark plug, the chamber pressure transducer, the injector fuel and oxidizer manifold pressure transducers, and the oxidizer valve. Both propellant valves mounted directly to the thruster to minimize dribble volume for pulsing duty cycles. The cutaway of Thruster No. 2 was documented in Figure 36, the completed thrust chamber assembly in Figures 46 and 47.

D. TEST

1. Test Setup

The Space Station Thruster No. 2 was assembled at Aerojet and shipped to NASA LeRC for altitude testing in their new low-thrust rocket engine facility. The thruster was mounted to a test stand within the LeRC facility designed to measure thrust. A water-cooled diffuser maintained the required nozzle back pressure to ensure that the thruster nozzle flowed full. Propellants were plumbed to the test cell from standard GH_2 and GO_2 trailers.

2. Instrumentation

The thruster test assembly was instrumented to measure thrust, propellant flowrates, inlet pressures and temperatures, coolant bulk temperature rise, and chamber internal (gasside) and external (backside) wall temperatures. There were thirty (30) thermocouples integral with the thrust chamber:

C1287 5153

Figure 45. Machined ZrCu Chamber Liner for Thruster No. 2

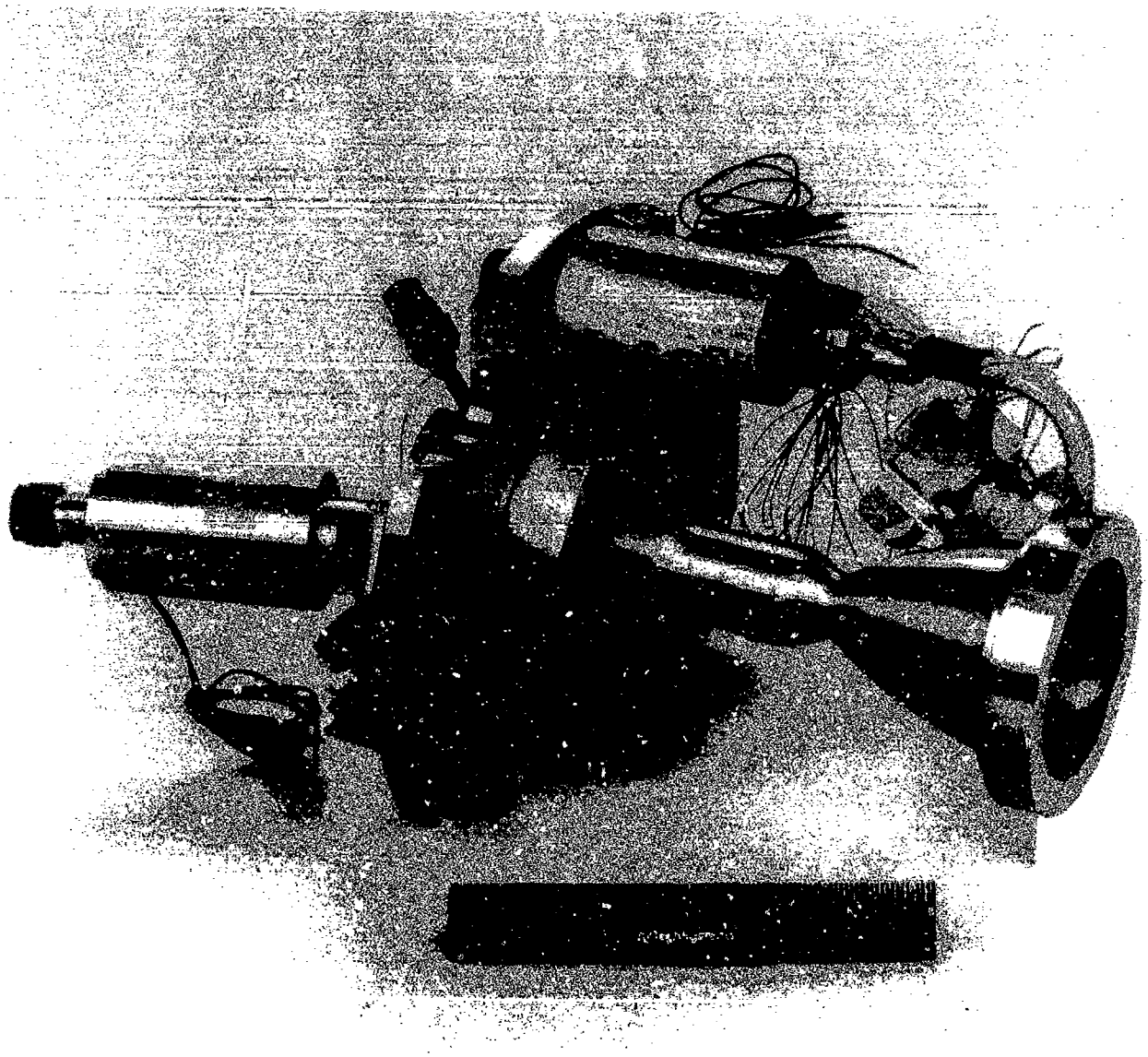

C1088 4

Figure 46. Thrust Chamber Assembly - Aft End

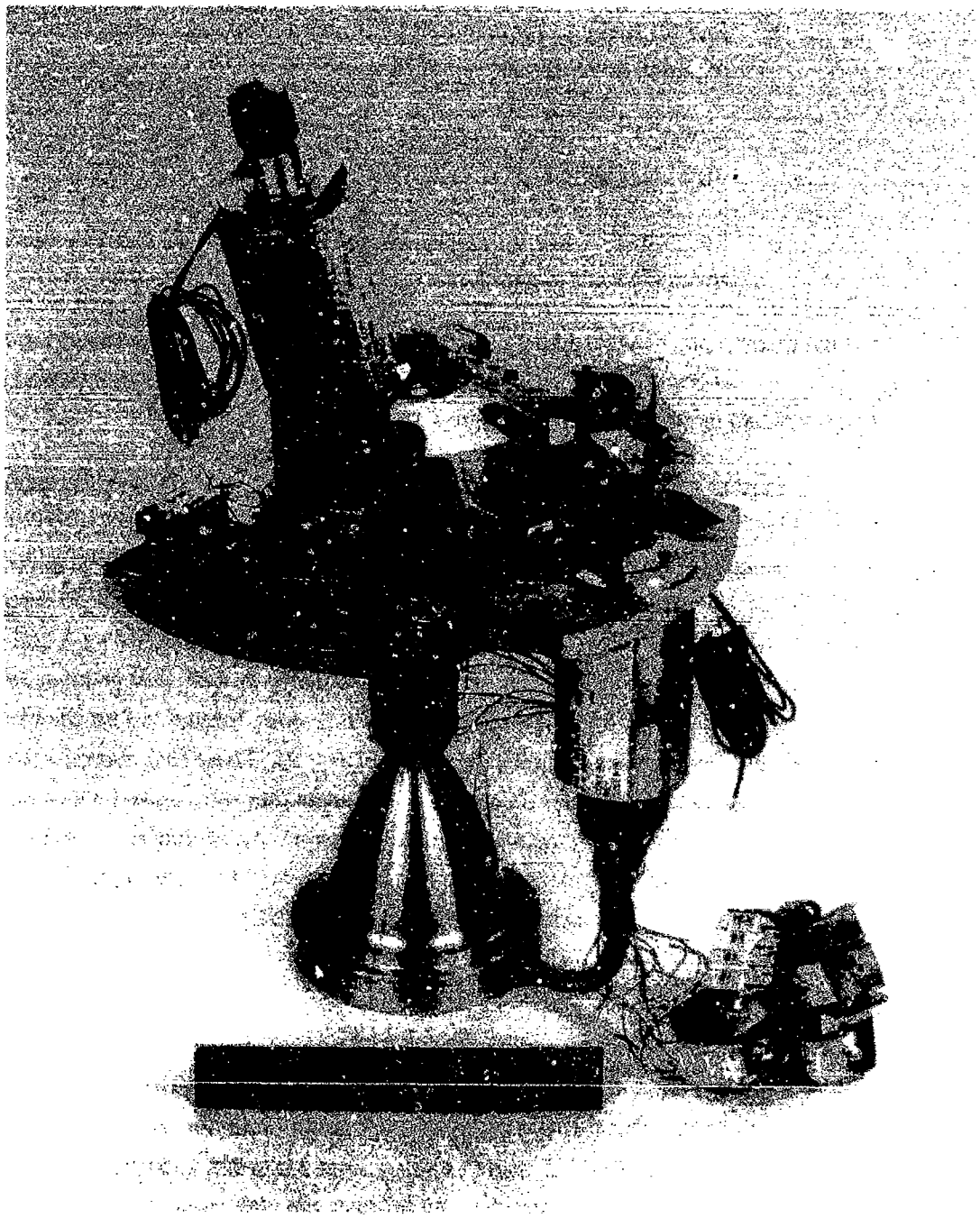

521

C1088 4620

Figure 47. Thrust Chamber Assembly - Head End

IV, D, Test (cont.)

- four (4) fuel injector manifold (TFJ) thermocouples — one (1) was required, three (3) were redundant;
- twelve (12) chamber internal (gasside) wall (TCI) thermocouples — six (6) were required, six (6) were redundant;
- fourteen (14) chamber external (backside) wall (TCE) thermocouples — seven (7) were required, seven (7) were redundant.

Two additional thermocouples were added to the chamber external wall in the converging and throat regions after Test No. 041. The aforementioned test instrumentation is summarized in Table XI and depicted in the schematic of Figure 48.

Further definition of the thermocouple positions was provided by Figures 49, 50, 51 and 52. Figure 49 defined the axial positions of the thermocouples relative to datum -A-, these positions designated as Station Nos. 1 through 7. The external thermocouples added after Test No. 041, TCE-CNVRG and TCE-THRT, were included for reference. Figure 50 designated the thermocouple row assignments, i.e. Row A, Row B, Row C, and Row D. Rows A and C were identical, as were Rows B and D, thus providing redundancy as well as to guard against attrition during fabrication. The internal thermocouples (TCI) were located in four channels milled in between the cooling channels, as indicated in Figure 50. These four channels (Rows A through D) were documented in Figures 51 and 52. Thermocouples were brazed within these four channels prior to electroforming the nickel (EFNi) closeout. Axial station four (4) was common to all four rows to provide measurement of circumferential temperature variations. The thermocouples were designated by internal or external location (TCI or TCE), by axial station and by row, e.g. TCI-1A, TCE-4C, TCI-3B, etc.

3. Test Summary

Thruster No. 2 was given basic checkout testing at the NASA LeRC test facility during the summer of 1989. This testing covered a broad range of mixture ratio (O/F), but a narrow range of fuel film cooling (FFC), i.e., an O/F range from 3.0 to 9.5, and FFC's of 55.2, 60.9, and 64.2 percent. Tables XII and XIII summarized the tests run with regard to O/F and FFC, respectively.

TABLE XI

TEST INSTRUMENTATION
SPACE STATION THRUSTER NO. 2

Parameter	Mneumonic	Range
Pressure		
Fuel Pressure, Tank	PFT	TBD
Oxid Pressure, Tank	POT	TBD
Fuel Pressure, Venturi Inlet	PFVI	TBD
Oxid Pressure, Venturi Inlet	POVI	TBD
Fuel Pressure, Thrust Chamber Valve Inlet	PFTCVI	50 - 300 psia
Oxid Pressure, Thrust Chamber Valve Inlet	POTCVI	50 - 300 psia
Fuel Pressure, Injector Manifold	PFJ(1)	20 - 200 psia
Oxid Pressure, Injector Manifold	POJ(1)	20 - 200 psia
Chamber Pressure	PC(1)	15 - 150 psia
Thrust		
Thrust,	F1	5 - 50 lbf
Redundant Thrust	F2	5 - 50 lbf
Temperature		
Fuel Temp., Venturi Inlet	TFVI	TBD
Oxid Temp., Venturi Inlet	TOVI	TBD
Fuel Temp., Thrust Chamber Valve Inlet	TFTCVI	-260° - 70°F(2)
Oxid Temp., Thrust Chamber Valve Inlet	TOTCVI	-160° - 70°F(2)
Fuel Temp., Injector Manifold	TFJ(3)	250° - 600°F(6)
Internal Chamber Wall Temp.	TCI(4)	40° - 1000°F(6)
External Chamber Wall Temp.	TCE(5)	40° - 1000°F(6)

TABLE XI

TEST INSTRUMENTATION
SPACE STATION THRUSTER NO. 2
(Continued)

Parameter	Mnemonic	Range
Electrical		
Current Trace, Fuel Thrust Chamber Valve	IFTCV	TBD
Current Trace, Oxid Thrust Chamber Valve	IOTCV	TBD
Voltage Trace, Fuel Thrust Chamber Valve	VFTCV	0 - 32 Volts
Voltage Trace, Oxid Thrust Chamber Valve	VOTCV	0 - 32 Volts

(1) Ports for indicated pressures are integral with the thruster.
(2) Indicated temperature range is the design range; however, actual temperature range is facility dependent and will probably be limited to perhaps 40° to 70°F.
(3) Four TFJ thermocouples are integral with the thruster; however, only one is required (three are redundant).
(4) Twelve TCI thermocouples are integral with the chamber outside wall; however, only severn are required (seven are redundant).
(6) Indicated temperature ranges are estimates only.

Additional instrumentation may be required to monitor test cell pressure and temperature, load cell temperature, and other facility parameters. All thermocouples that are integral with the thruster are ANSI Type K (Chromel/Alumel) with a range of 32 to 2300°F.

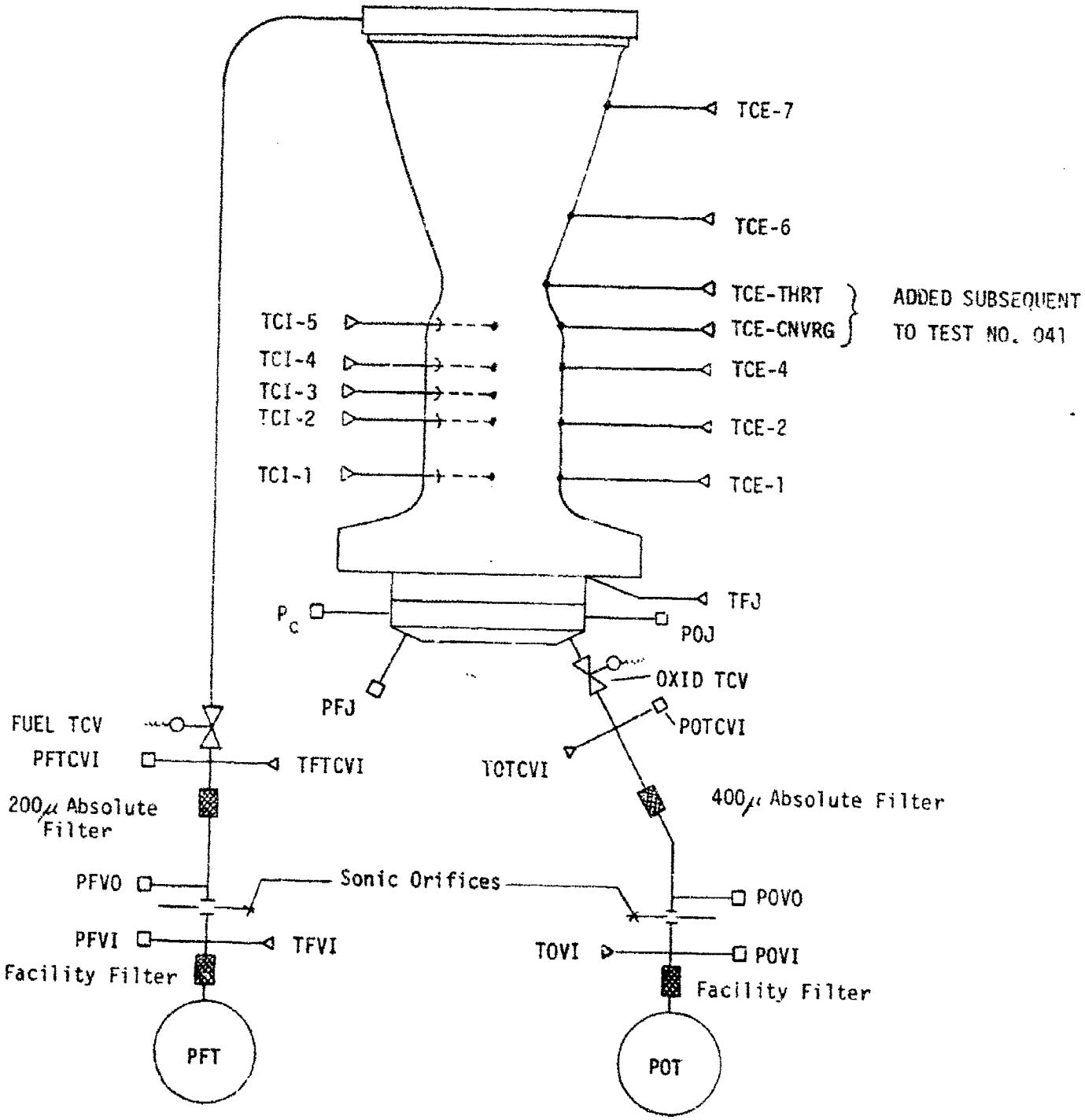
TCE-7
TCE-6
TCE-THRT
TCE-CNVRG
ADDED SUBSEQUENT TO TEST NO. 041
TCI-5
TCI-4
TCI-3
TCI-2
TCI-1
TCE-4
TCE-2
TCE-1
TFJ
P_c
POJ
OXID TCV
PFJ
POTCVI
FUEL TCV
PFTCVI
TFTCVI
TOTCVI
200μ Absolute Filter
400μ Absolute Filter
PFVO
Sonic Orifices
POVO
PFVI
TFVI
TOVI
POVI
Facility Filter
Facility Filter
PFT
POT

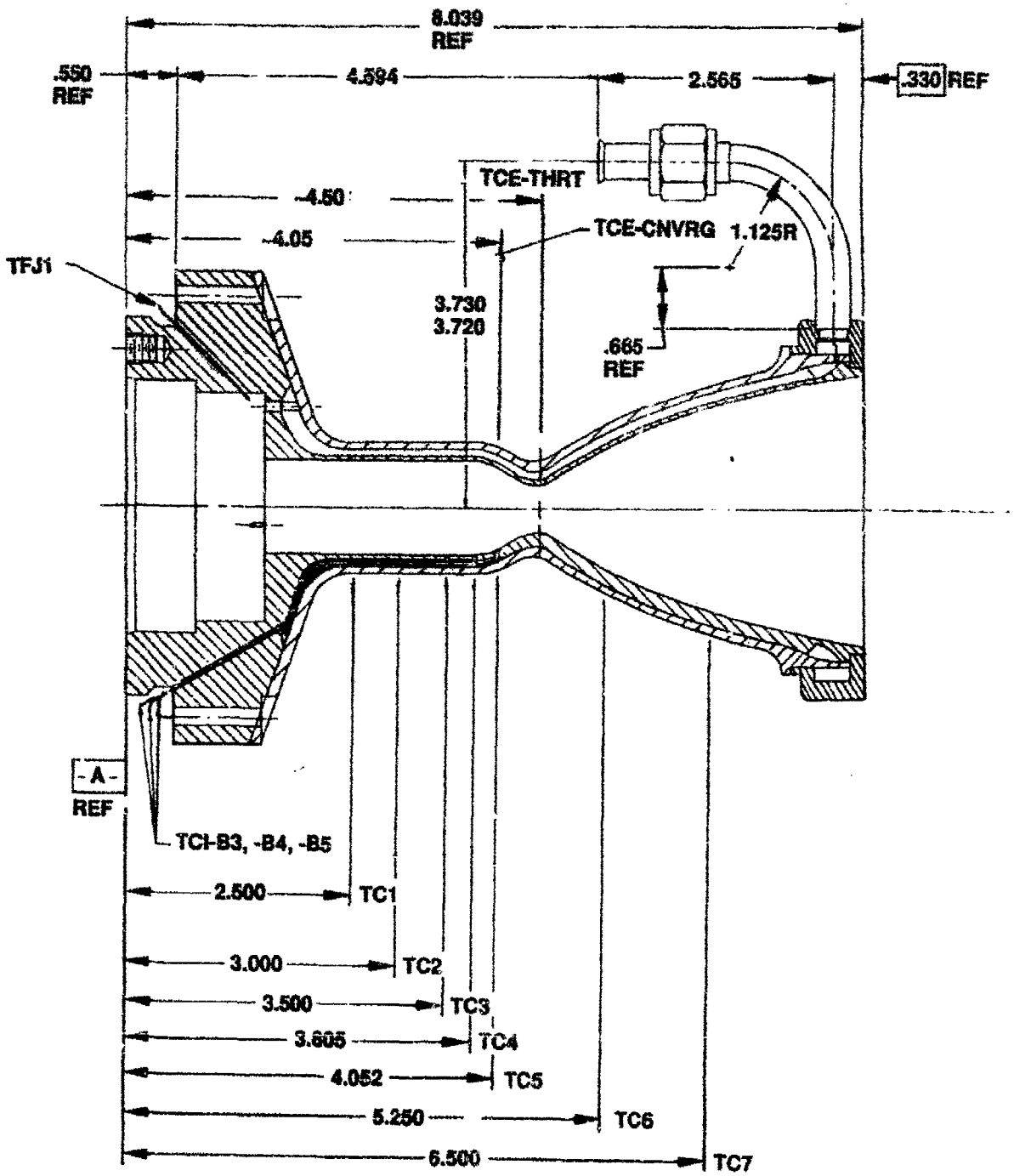

Thermocouple Axial Positions
Stations Nos. 1 Through 7

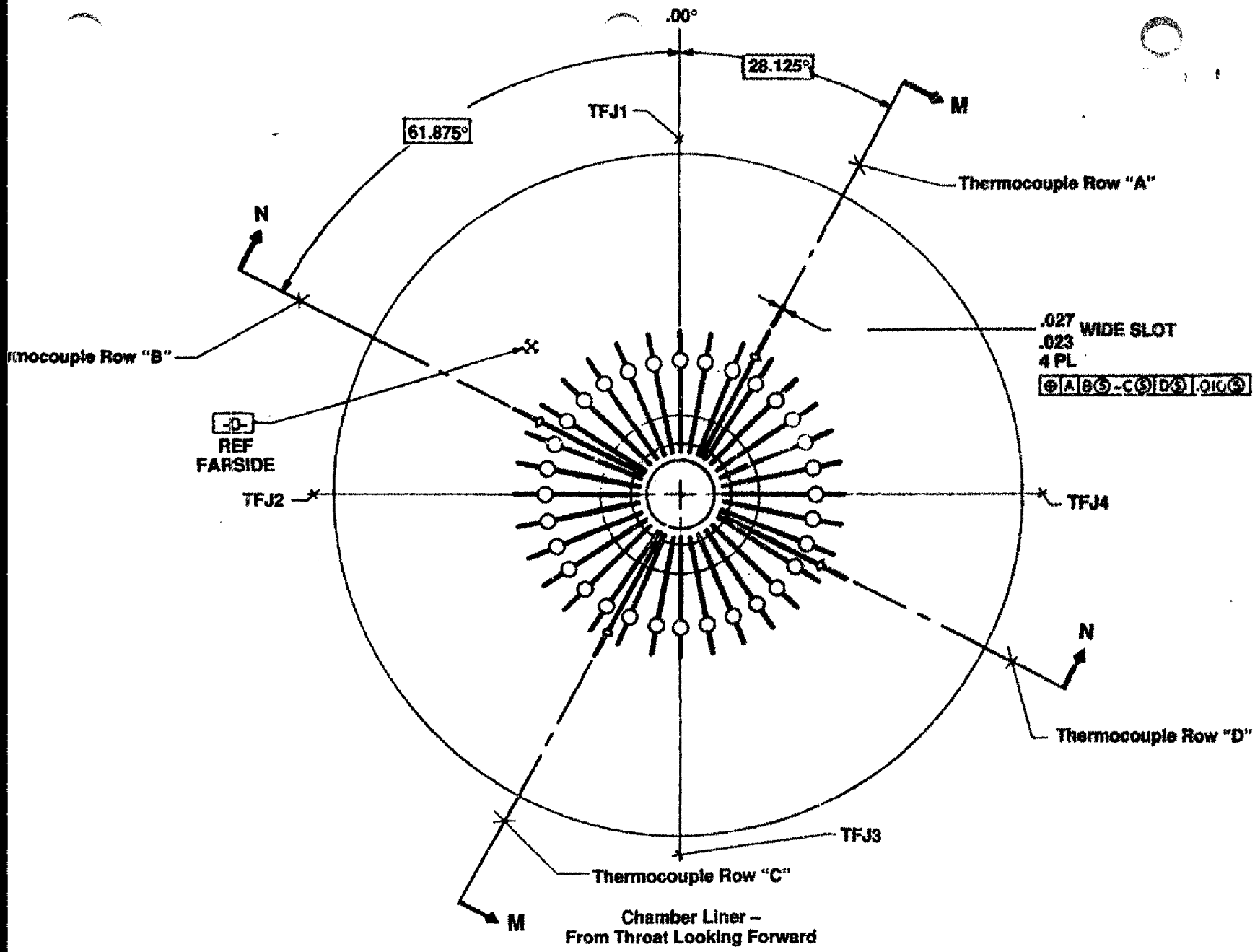

Figure 50. Internal Thermocouple (TCI) Row Designations

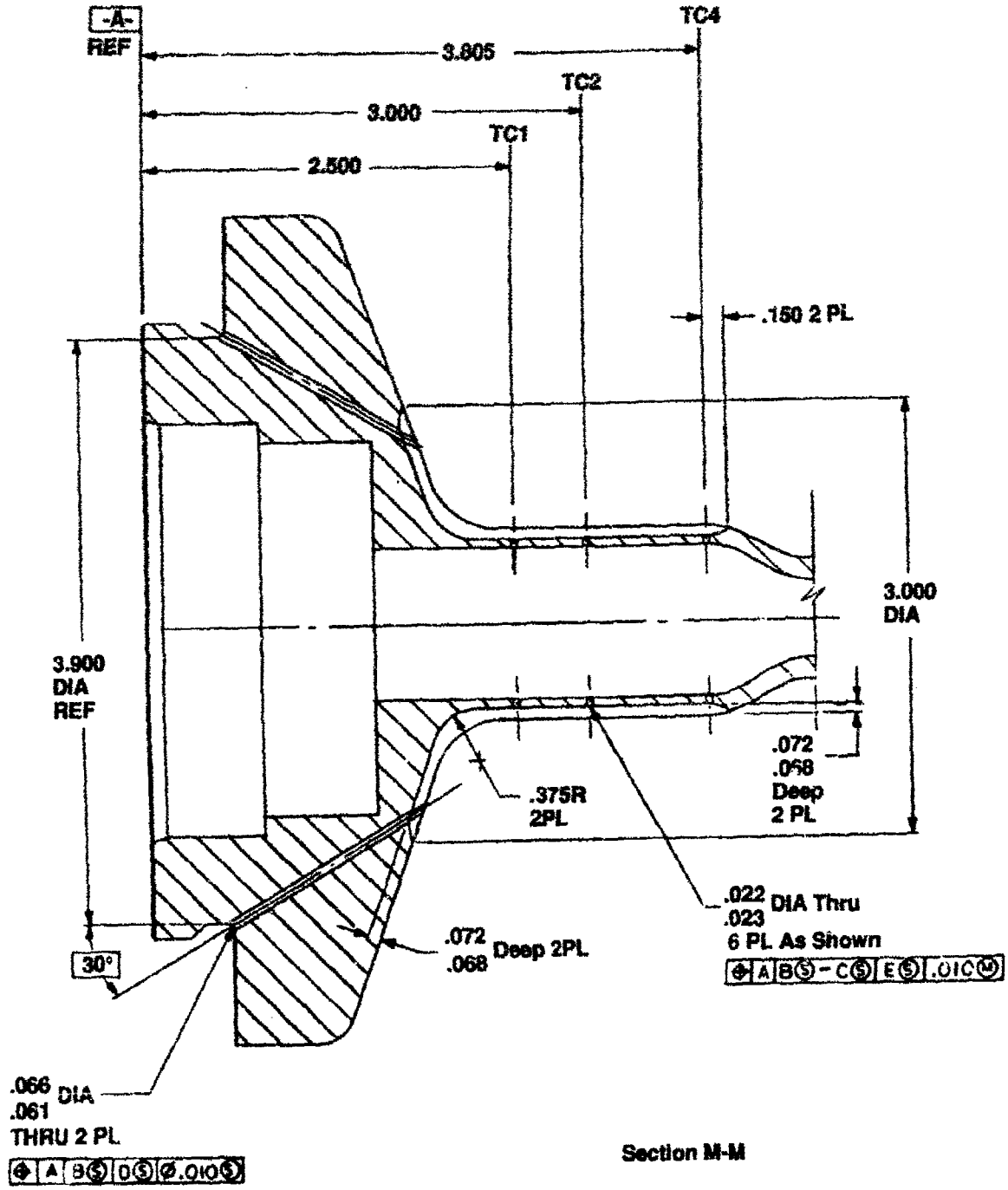
-A-
REF
3.805
TC4
TC2
3.000
TC1
2.500
.150 2 PL
3.000
DIA
3.900
DIA
REF
.072
.068
Deep
2 PL
.375R
2PL
.022
.023
DIA Thru
6 PL As Shown
.072
.068
Deep 2PL
30°
.066
.061
DIA
THRU 2 PL
Section M-M

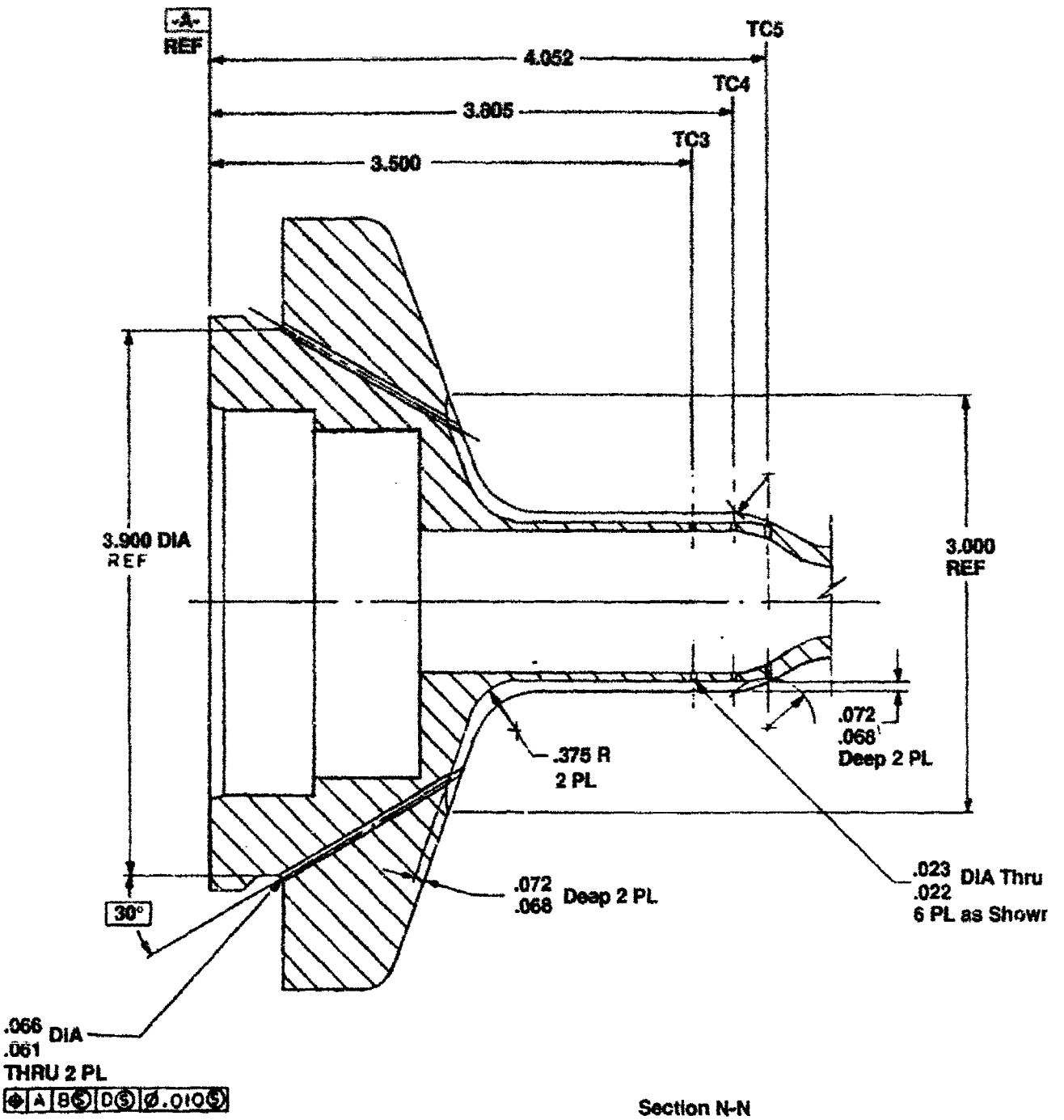
-A-
REF
4.052
TC5
TC4
3.805
TC3
3.500
3.900 DIA
REF
3.000
REF
.072
.068
Deep 2 PL
.375 R
2 PL
.023
.022
DIA Thru
6 PL as Shown
.072
.068
Deep 2 PL
30°
.066
.061
DIA
THRU 2 PL
A B D Ø.010

Section N-N

TABLE XII

THRUSTER NO. 2 TEST SUMMARY FOR MIXTURE RATIO RANGE

Mixture Ratio O/F	Total Duration (sec)	Total Impulse (lbf-sec)
3.0	105	2,265
3.5	230	5,880
4.0	629	15,960
4.5	20	507
5.0	666	18,232
5.5	10	249
6.0	534	14,718
6.5	5	131
7.0	295	7,714
7.5	9	216
8.0	328	8,433
8.5	14	338
9.0	—	—
9.5	37	926
Total:	2,882	75,569

TABLE XIII

THRUSTER NO. 2 TEST SUMMARY FOR PERCENT FUEL FILM COOLING RANGE

Fuel Film Cooling, FFC - (%)	Mixture Rato O/F	Total Duration, t-(sec)	Total Impulse, I_t-(lbf-sec)
55.2	3.0	5	124
	3.5	85	2,106
	4.0	154	3,664
	5.0	148	4,234
	6.0	135	3,917
	7.0	65	1,802
	7.5	4	91
	8.0	84	2,014
	8.5	9	216
60.9	3.0	95	2,023
	3.5	140	3,644
	4.0	405	10,479
	4.5	15	381
	5.0	448	12,276
	5.5	10	249
	6.0	334	9,181
	6.5	5	131
	7.0	168	4,320
	7.5	5	125
	8.0	235	6,204
	8.5	5	122
	9.5	37	926
64.2	3.0	5	118
	3.5	5	130
	4.0	70	1,817
	4.5	5	126
	5.0	70	1,722
	6.0	65	1,620
	7.0	62	1,592
	8.0	9	215
	Total:	2,882	75,569

IV, D, Test (cont.)

4. Experimental Results

The testing performed at NASA LeRC during the summer of 1989 consisted solely of limited checkout testing. Some initial ignition problems were caused by an improperly insulated high voltage cable, but these were ultimately resolved. In addition, the sealing surface at the injector/chamber interface was scratched while resolving the ignition problem, resulting in below normal performance measurements due to slight GH_2 leakage during a number of tests, occurred. As a result, the number of tests providing a true view of the Thruster No. 2 operation were fewer than desired, but sufficient to determine its operating characteristics. Tests were conducted over mixture ratios ranging from 2.86 to 9.47 at fuel film cooling (FFC) percentages of 55.2, 64.2 and 60.9. Due to the aforementioned GH_2 leakage, the tests for FFC's of 55.2 and 64.2 percent were suspect as performance measurements were too low. Tests at 60.9 percent FFC with and without GH_2 leakage showed a consistent trend.

The measured thruster performance for 60.9 percent FFC at a nominal chamber pressure of 75.0 psia followed the predicted performance within 1 to 2 percent from a mixture ratio of 3.0 to 8.0, as shown in Figure 53. The line for the predicted values was for an assumed injector energy release efficiency (ERE) of 97 percent. The maximum ERE determined for Thruster No. 1 was 96.1 percent. Using this ERE value for predicting performance resulted in Figure 54, where the predicted and the measured performance coincided over the range of mixture ratio from 3.0 to 8.0.

Unlike the performance data, the measured thermal data did not closely follow the prediction. The trend was right, but the magnitude was high by about 200°F for the gas-side wall. In addition, the ΔT through the chamber wall appeared to be less than the predicted 100°F. These comparisons were depicted in Figure 55. Although the wall temperature was higher, the fact that the ΔT was lower indicated an even greater low cycle fatigue (LCF) life available; however, the LCF was already in excess of 10,000 cycles for a predicted ΔT of 100°F.

E. EVALUATION OF RESULTS

Since Space Station Thruster No. 2 had a significant number of thermocouples (T/C) for taking gas-side and back-side wall temperature data, as well as coolant bulk temperature rise, calibration of the thermal model was performed. The thruster was instrumented with 12 gas-side

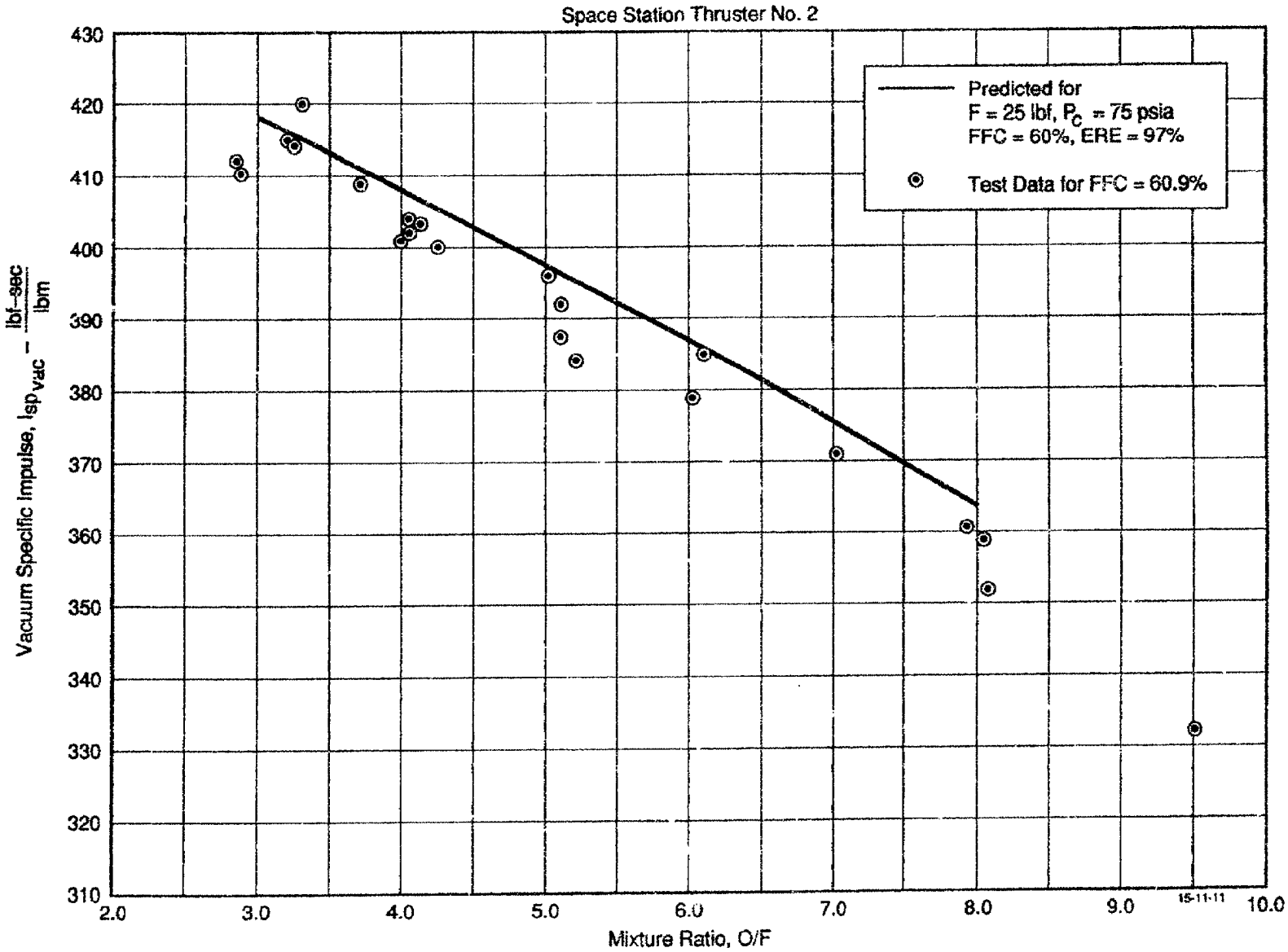

Figure 53. Predicted Vs. Measured Performance for an Assumed Injector ERE of 97.0%

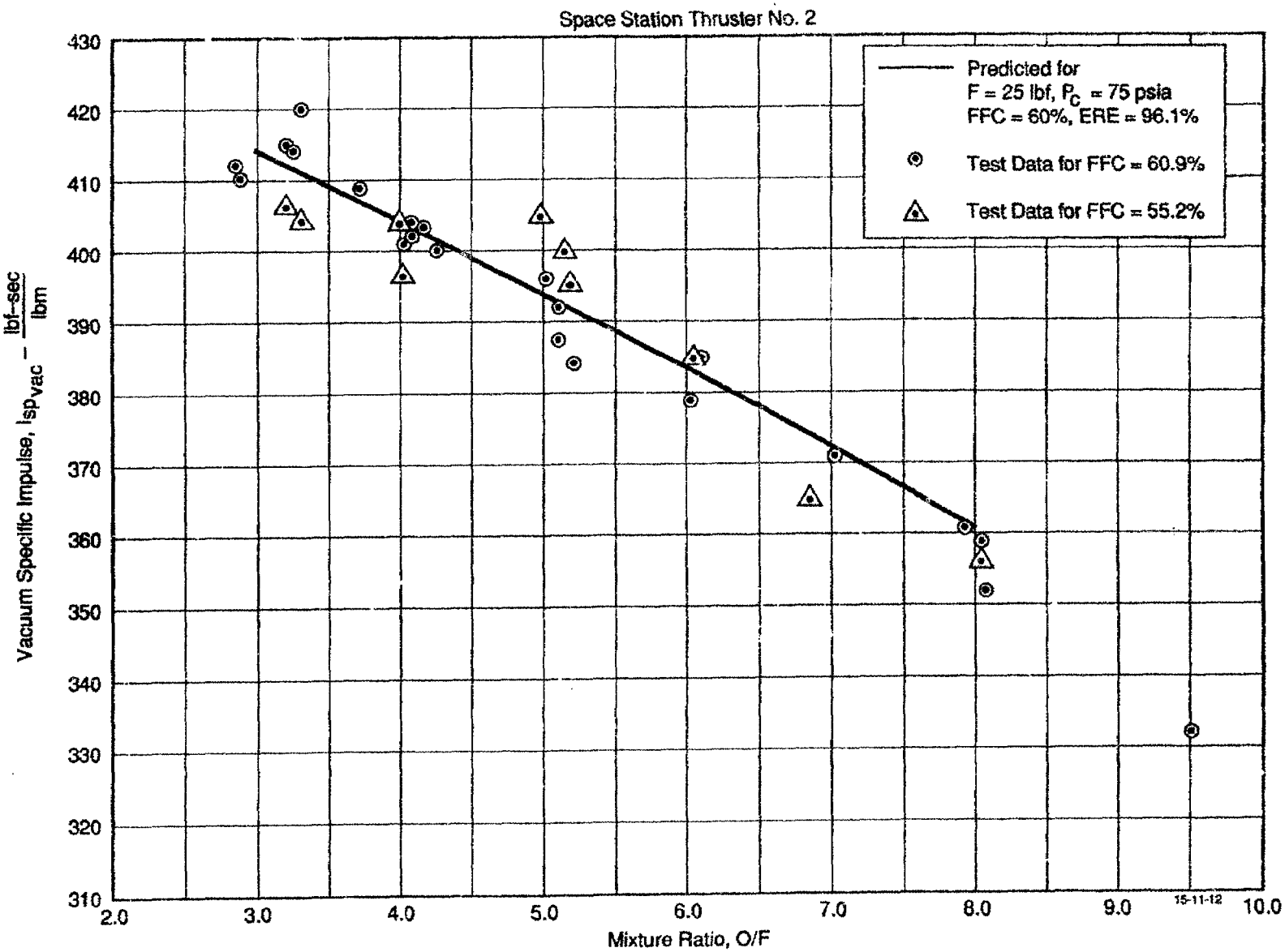

Figure 54. Predicted Vs. Measured Performance for an Assumed Injector ERE of 96.1%

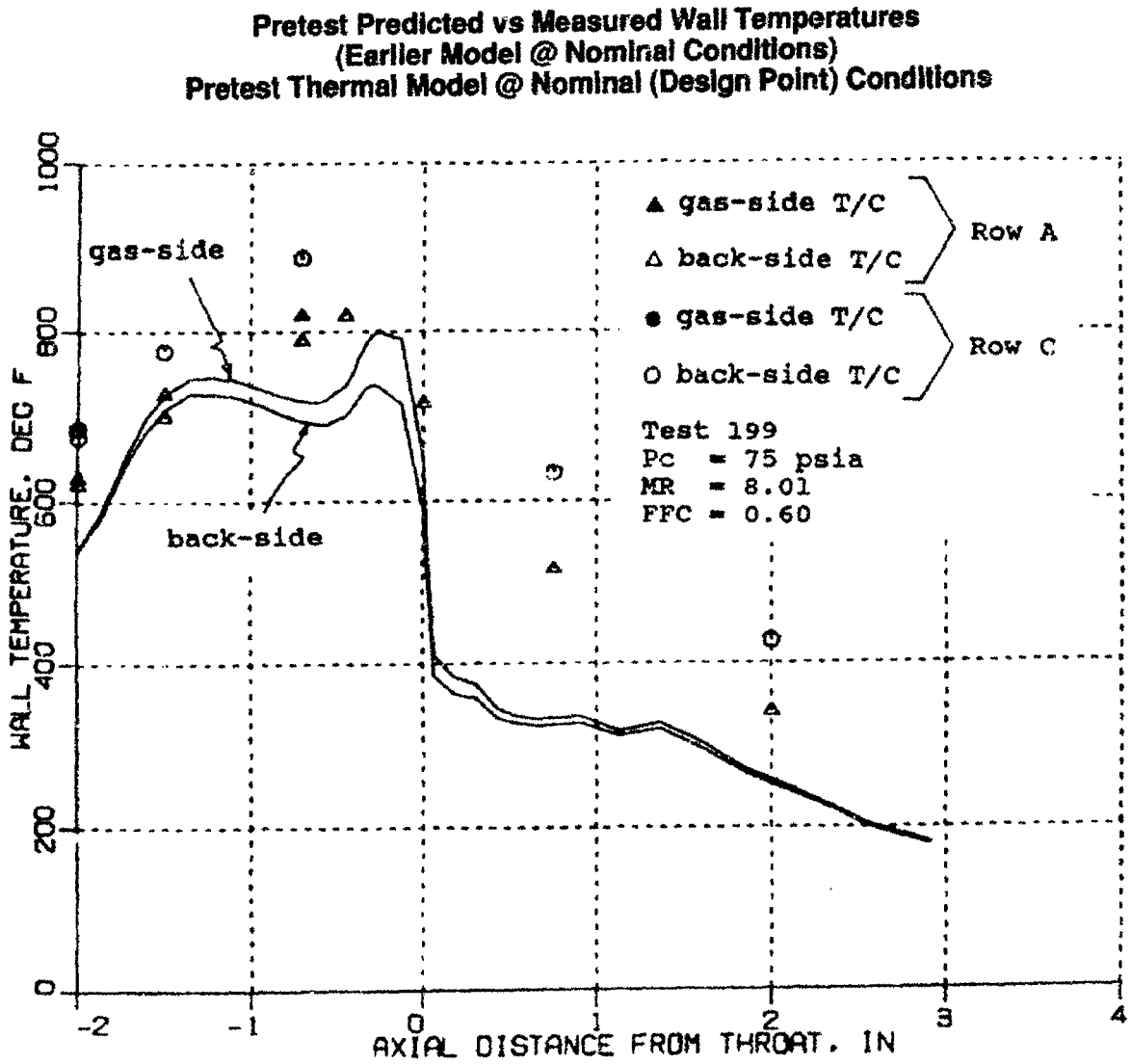

Figure 55. Measured vs Predicted Wall Temperatures at the Design Point

thermocouples and 18 back-side thermocouples scattered over a grid of 7 axial stations and 4 circumferential positions, as shown in Figure 56, where axial station 1 corresponds to the end of the film coolant sleeve insert. Steady state data from five tests (Test No. 166, 193, 199, 207, and 227) were chosen to define representative wall temperatures over a wide range of mixture ratio. Tables XIV to XVIII present the test data summary for these five tests. Due to the scarcity of gas-side thermocouples, the back-side thermocouple data was used to calibrate and validate the model. Since the heat flux is low and the wall is made of copper, the difference in temperature between the gas-side and back-side is also low. The highest back-side temperatures were recorded along row C and the lowest along row A, which is on the other side. Row A has a back-side thermocouple measurement on all 7 axial positions, while row C has all but the convergent section and throat measurements. Since it was desirable to calibrate to the hottest row, the two missing measurements in row C were estimated from row A, as graphically illustrated in Figures 57 to 61 for the five tests.

Back-side wall temperature measurements from row C were used to calibrate the thermal model. The model was calibrated to the nominal conditions of 75 psia chamber pressure, a mixture ratio of 8 and 60% fuel film cooling, which were the conditions achieved in Test 199. The calibration was first performed for an entrainment multiplier, Km, of 5.0, which was used for pretest predictions in an earlier model. This Km value is based on the test data correlation of the JPL thruster. However, it was found that a Km of 2.2 gave a better fit of the head end data, as shown in Figure 62. The Cgn profile for the calibrated model at both Km values is shown in Figure 63. The Cgn value is 0.9 in the barrel, 0.6 in the throat, and 1.1 in the nozzle for the Km of 5.0 model. The Cgn value is 1.3 in the barrel, 0.8 in the throat, and 1.1 in the nozzle for the Km of 2.2 model. The slower mixing model, Km of 2.2, requires higher Cgn values upstream of the throat to account for the lower wall mixture ratio. However, downstream of the throat, the wall mixture ratio for both Km values is high enough as to produce similar heat fluxes, thus giving the same Cgn value. The predicted stream tube mixture ratios are shown in Figure 64 for both Km values. The corresponding adiabatic wall temperatures are shown in Figure 65.

Four tests were used to validate the calibrated model at off-nominal conditions. Three tests (Test Nos. 193, 207, and 227) were at off-nominal mixture ratio conditions (MR = 3 - 10) and one test (Test No. 166) was at an off-nominal fuel film cooling condition (55% FFC). Figures 66 to 69 show that the slower mixing model, Km of 2.2, predicts the measured back-side wall temperatures much better than the faster mixing model, Km of 5.0, for all three off-mixture ratio tests. The slower mixing model also predicts the slope of wall temperature profile in the

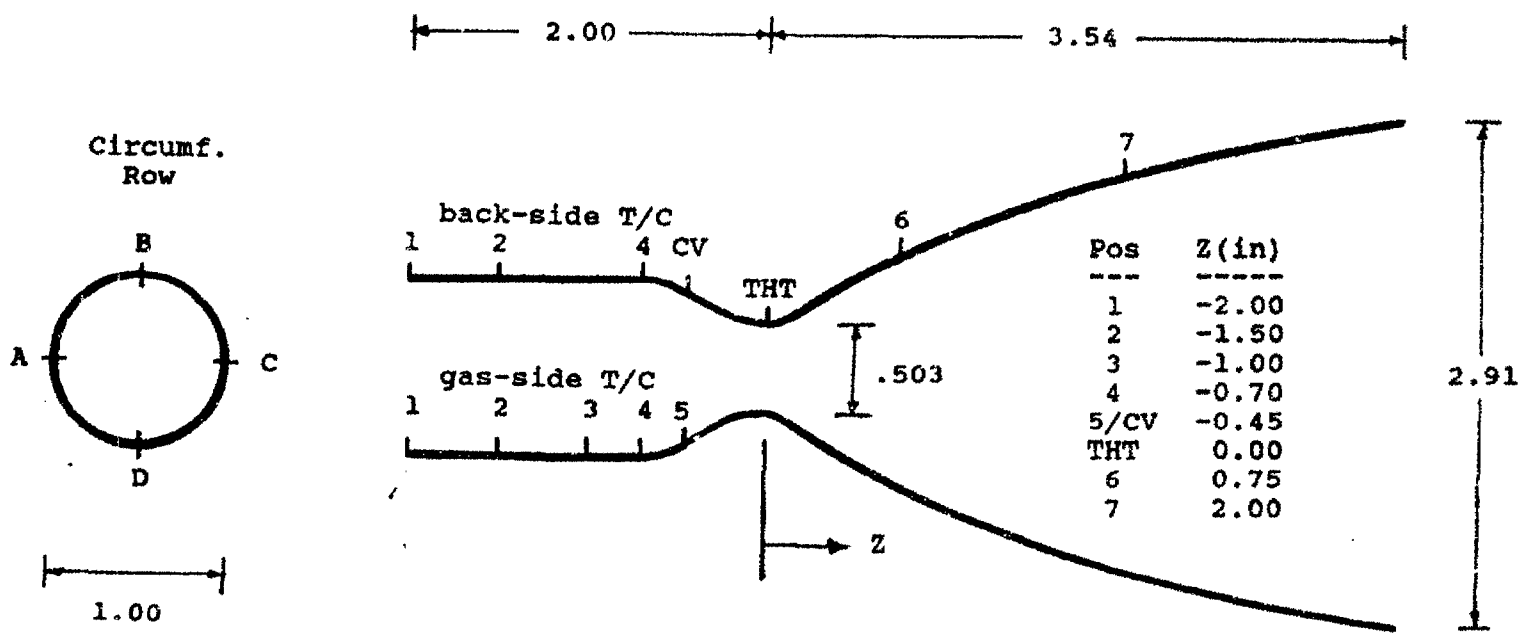

Figure 56. Thermocouple Grid Position

TABLE XIV
TEST DATA SUMMARY FOR TEST NO. 166

Test 166
---

t = 47.4 sec
F = 26.66 lb
Pc = 75 psia
MR = 8.02
Isp = 355.9 sec
Wt = .0749 lb/sec
Pcool = 105 psia (inlet)
80 psia (outlet)
Tcool = 78 deg F (inlet)
599 deg F (outlet)
FFC=.55

ΔTsl = 297 deg F (Est.)
Tsl = 599 + 297 = 896 deg F
RHOC = .0104 lb/ft3
RHOE = .0285 lb/ft3
UCUE = 1.11
MUSC = .918E-06 lb/in-sec

GAS-SIDE T/C

Axial Pos	Circumferential Pos A	B	C	D
1	687	-	736	-
2	808	-	-	-
3	-	929	-	932
4	919	713	-	945
5	-	995	-	1005

BACK-SIDE T/C

Axial Pos	Circumferential Pos A	B	C	D
1	676	698	705	717
2	775	805	839	817
4	882	914	954	922
CV	910	-	-	-
THT	856	-	-	-
6	566	-	616	-
7	368	-	437	-

Row C Estimate from Row A T/C

CV = 984 deg F
THT = 926 deg F

TABLE XV
TEST DATA SUMMARY FOR TEST NO. 193

Test 193
---

t = 59.9 sec
F = 28.54 lb
Pc = 79 psia
MR = 5.12
Isp = 392.0 sec
Wt = .0728 lb/sec
Pcool = 129 psia (inlet)
86 psia (outlet)
Tcool = 85 deg F (inlet)
382 deg F (outlet)
FFC=.60

ΔTsl = 234 deg F (Est.)
Tsl = 382 + 234 = 616 deg F
RHOC = .0138 lb/ft3
RHOE = .0248 lb/ft3
UCUE = 1.22
MUSC = .785E-06 lb/in-sec

GAS-SIDE T/C

Axial Pos	Circumferential Pos A	B	C	D
1	412	-	442	-
2	490	-	-	-
3	-	561	-	574
4	529	539	-	567
5	-	573	-	590

BACK-SIDE T/C

Axial Pos	Circumferential Pos A	B	C	D
1	404	423	436	438
2	460	481	510	496
4	503	527	577	543
CV	515	-	-	-
THT	477	-	-	-
6	333	-	378	-
7	233	-	320	-

Row C Estimate from Row A T/C

CV = 596 deg F
THT = 550 deg F

TABLE XVI
TEST DATA SUMMARY FOR TEST NO. 199

Test 199
---

t = 59.5 sec
F = 27.81 lb
Pc = 75 psia
MR = 8.01
Isp = 358.8 sec
Wt = .0775 lb/sec
Pcool = 105 psia (inlet)
79 psia (outlet)
Tcool = 86 deg F (inlet)
580 deg F (outlet)
FFC=.60

ΔTsl = 258 deg F (Est.)
Tsl = 580 + 258 = 838 deg F
RHOC = .0109 lb/ft3
RHOE = .0304 lb/ft3
UCUE = 1.24
MUSC = .890E-06 lb/in-sec

GAS-SIDE T/C

Axial Pos	Circumferential Pos A	B	C	D
1	631	-	687	-
2	728	-	-	-
3	-	834	-	861
4	819	663	-	868
5	-	893	-	922

BACK-SIDE T/C

Axial Pos	Circumferential Pos A	B	C	D
1	622	643	677	671
2	701	728	777	759
4	790	819	884	848
CV	818	-	-	-
THT	717	-	-	-
6	517	-	634	-
7	342	-	427	-

Row C Estimate from Row A T/C

CV = 918 deg F
THT = 822 deg F

TABLE XVII
TEST DATA SUMMARY FOR TEST NO. 207

Test 207
---

t = 59.6 sec
F = 25.40 lb
Pc = 72 psia
MR = 3.26
Isp = 414.3 sec
Wt = .0613 lb/sec
Pcool = 145 psia (inlet)
82 psia (outlet)
Tcool = 89 deg F (inlet)
294 deg F (outlet)
FFC=.60

ΔTsl = 211 deg F (Est.)
Tsl = 294 + 211 = 505 deg F
RHOC = .0140 lb/ft3
RHOE = .0174 lb/ft3
UCUE = 1.27
MUSC = .730E-06 lb/in-sec

GAS-SIDE T/C

Axial Pos	Circumferential Pos A	B	C	D
1	304	-	323	-
2	379	-	-	-
3	-	460	-	459
4	433	426	-	427
5	-	423	-	426

BACK-SIDE T/C

Axial Pos	Circumferential Pos A	B	C	D
1	299	311	313	317
2	336	350	360	353
4	368	383	397	390
CV	367	-	-	-
THT	327	-	-	-
6	234	-	266	-
7	180	-	233	-

Row C Estimate from Row A T/C

CV = 396 deg F
THT = 357 deg F

TABLE XVIII
TEST DATA SUMMARY FOR TEST NO. 227

Test 227
---

t = 31.6 sec
F = 25.34 lb
Pc = 71 psia
MR = 9.47
Isp = 331.6 sec
Wt = .0764 lb/sec
Pcool = 95 psia (inlet)
73 psia (outlet)
Tcool = 88 deg F (inlet)
595 deg F (outlet)
FFC=.60

ΔTsl = 266 deg F (Est.)
Tsl = 595 + 266 = 861 deg F
RHOC = .0101 lb/ft3
RHOE = .0314 lb/ft3
UCUE = 1.18
MUSC = .901E-06 lb/in-sec

GAS-SIDE T/C

Axial Pos	Circumferential Pos A	B	C	D
1	704	-	754	-
2	825	-	-	-
3	-	934	-	975
4	937	805	-	986
5	-	1002	-	1044

BACK-SIDE T/C

Axial Pos	Circumferential Pos A	B	C	D
1	693	708	726	746
2	799	817	868	858
4	907	925	996	964
CV	934	-	-	-
THT	885	-	-	-
6	593	-	665	-
7	388	-	488	-

Row C Estimate from Row A T/C

CV =1028 deg F
THT = 976 deg F

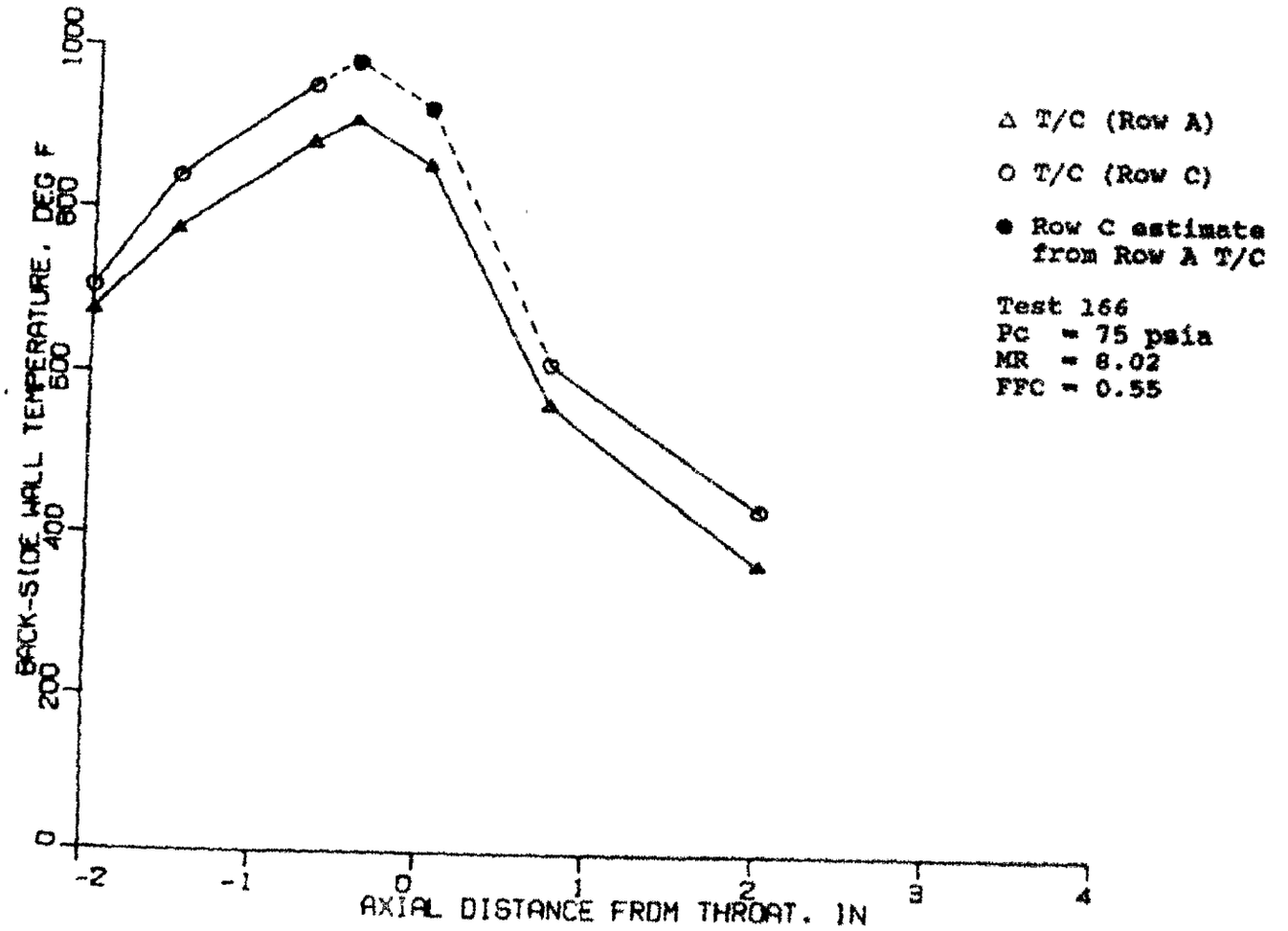

Figure 57. Measured Back-Side Wall Temperatures for Test No. 166

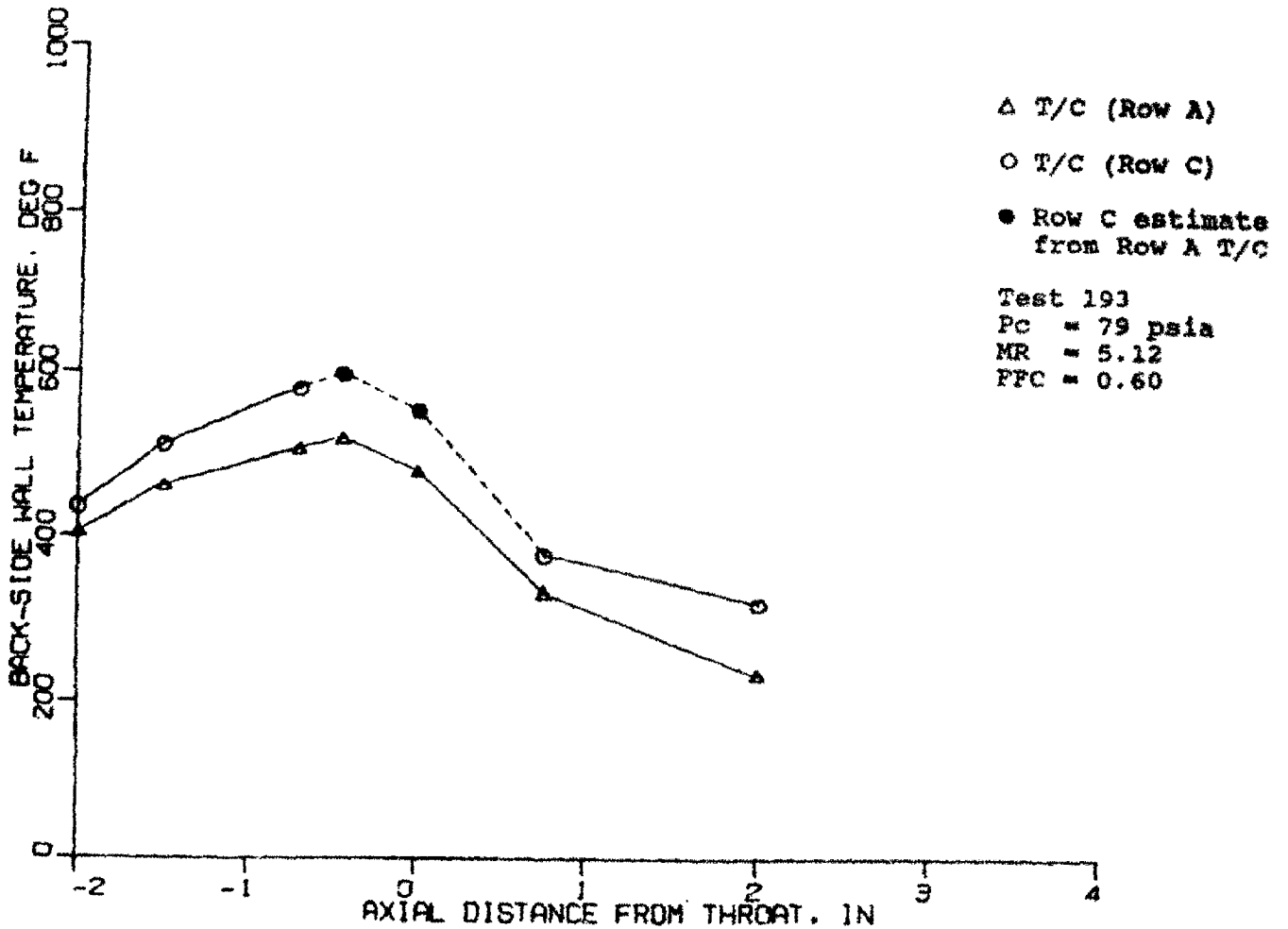

Figure 58. Measured Back-Side Wall Temperatures for Test No. 193

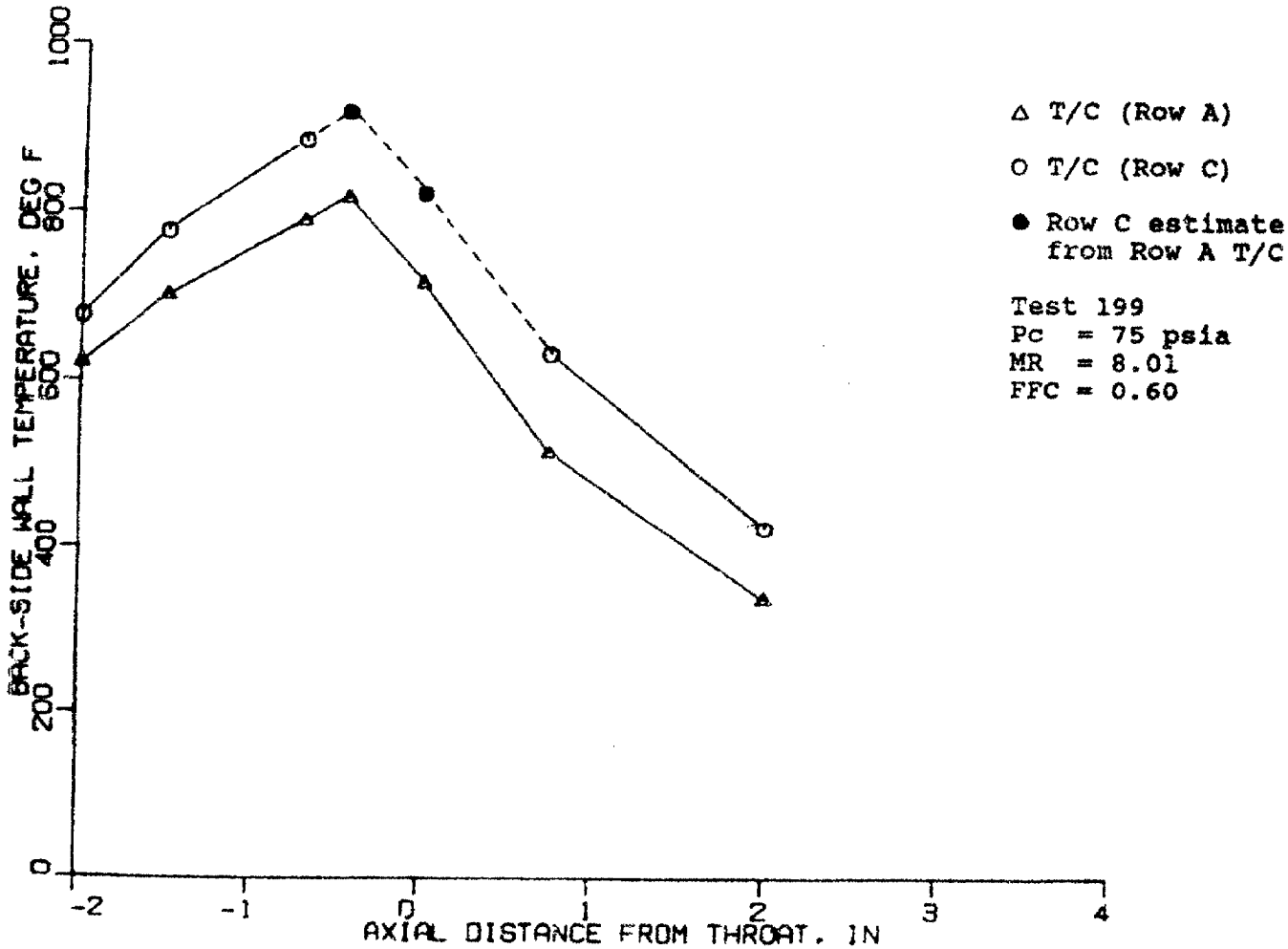

Figure 59. Measured Back-Side Wall Temperatures for Test No. 199

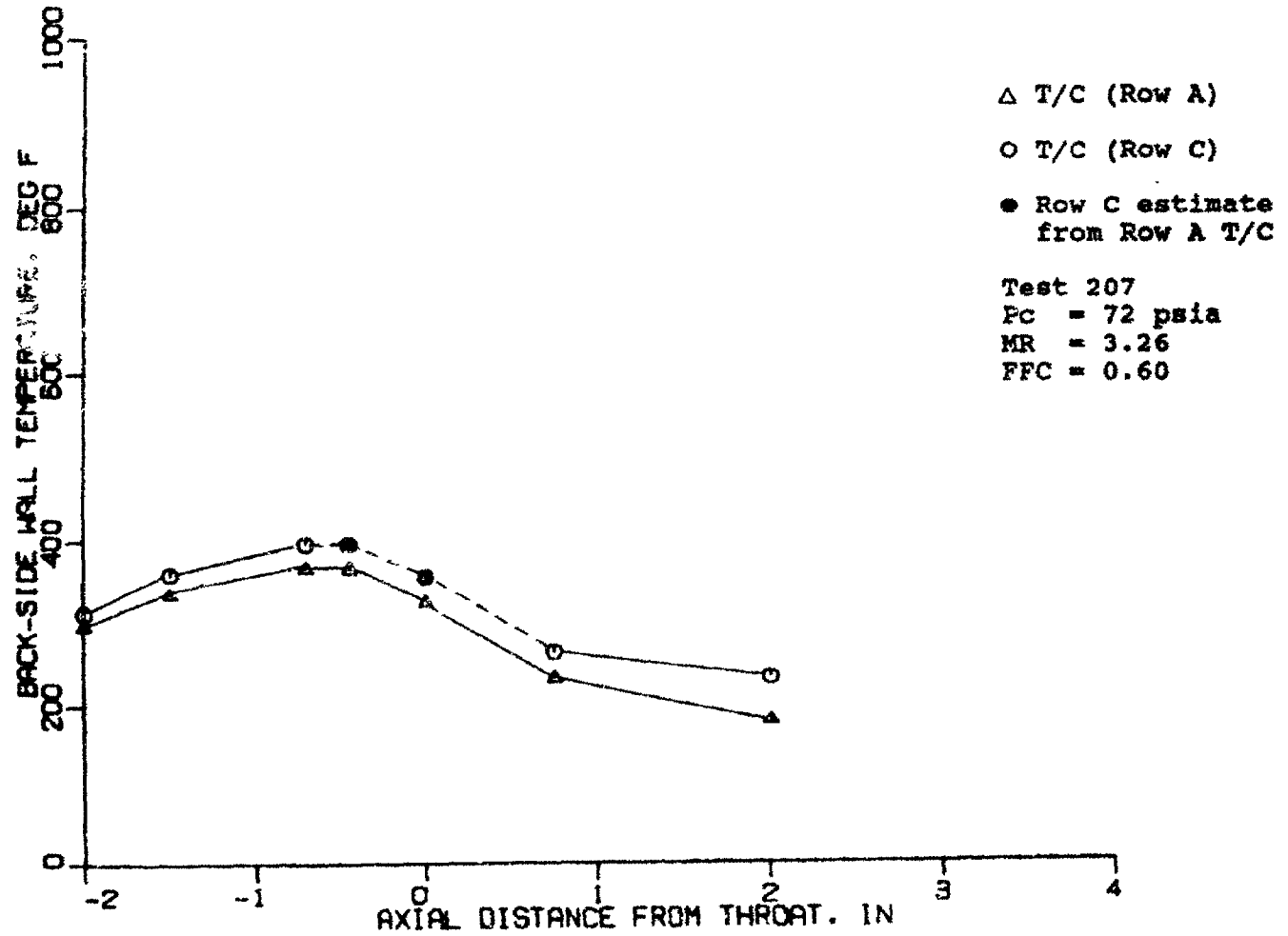

Figure 60. Measured Back-Side Wall Temperatures for Test No. 207

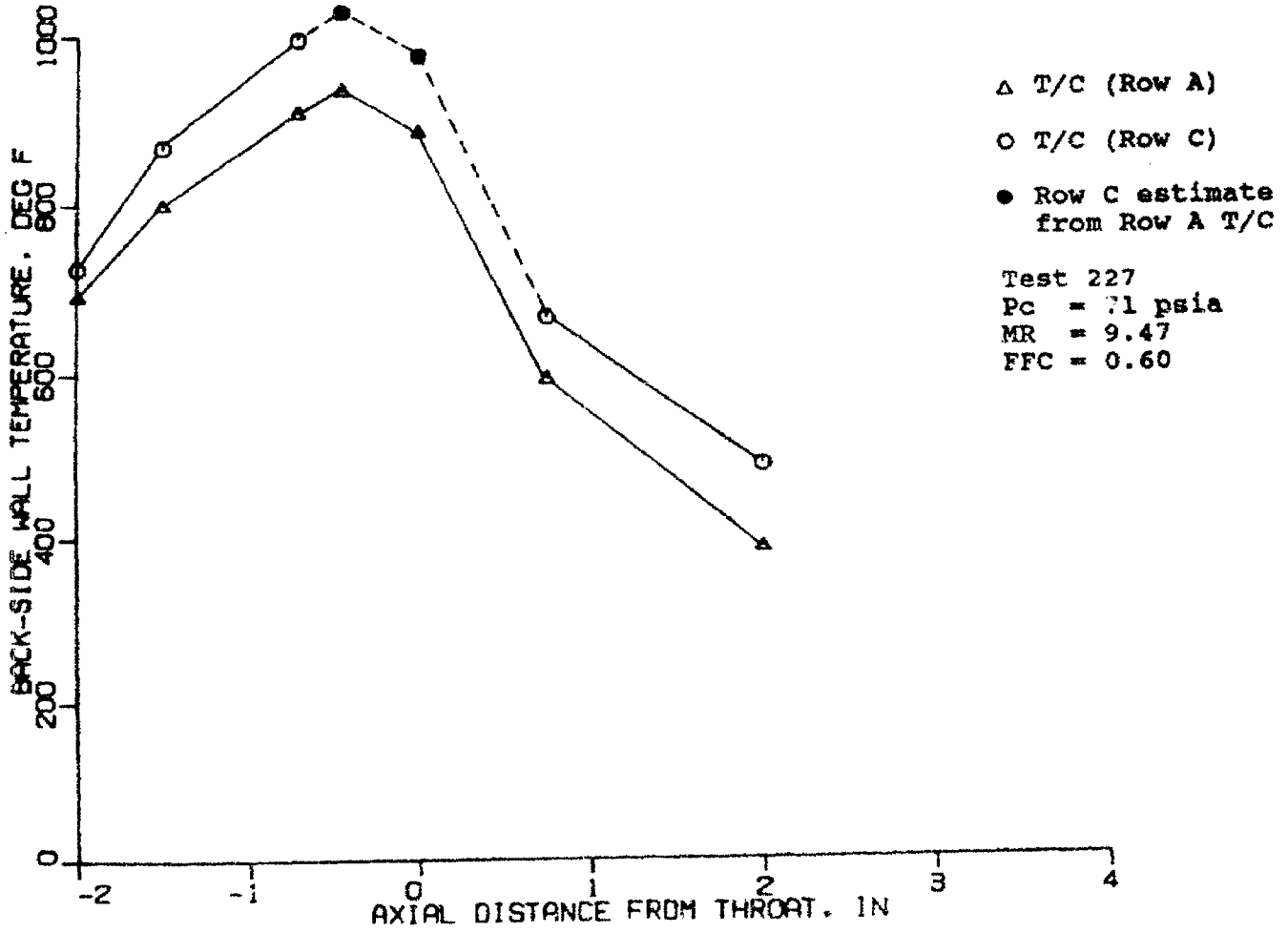

Figure 61. Measured Back-Side Wall Temperatures for Test No. 227

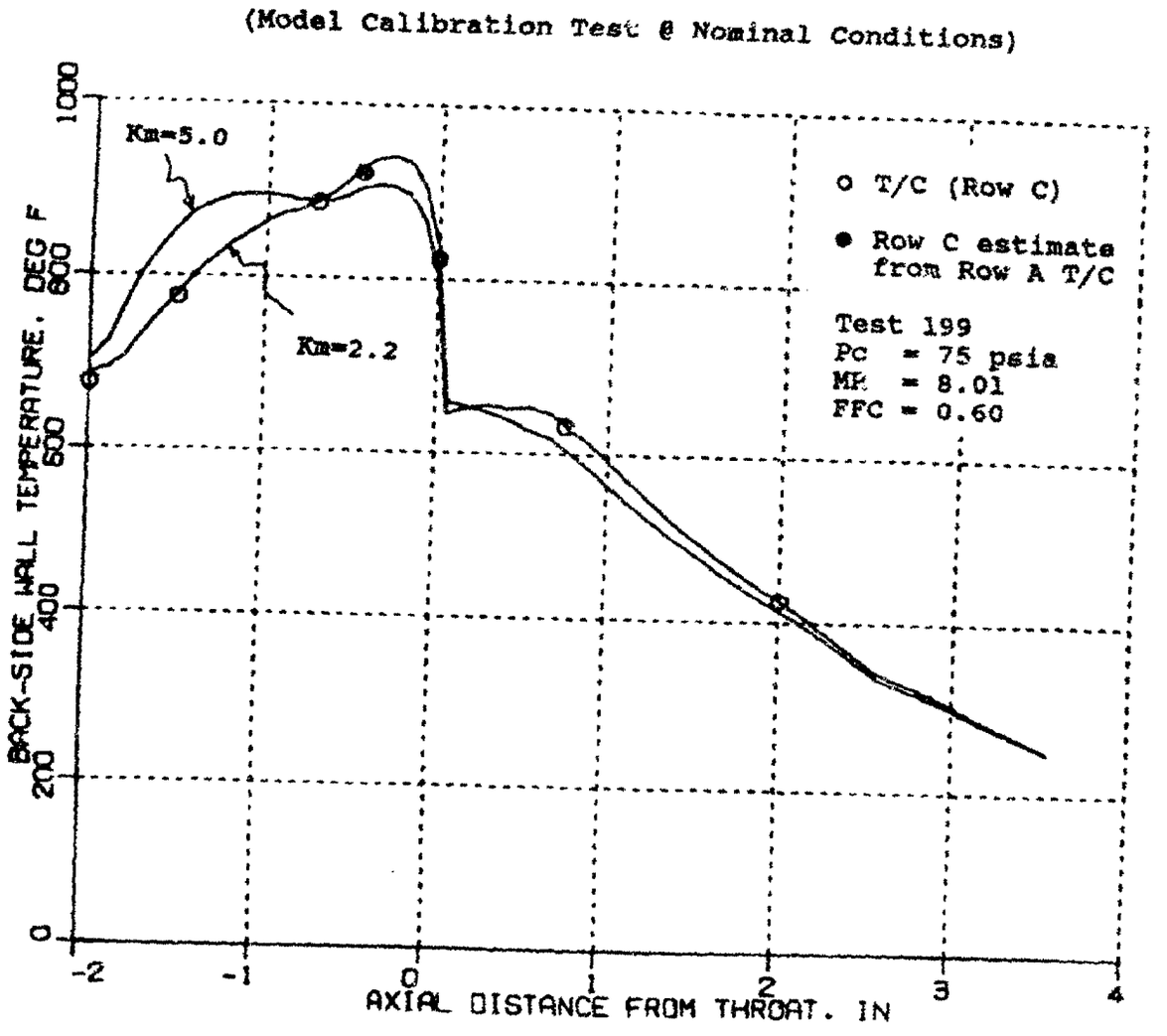

Figure 62. Predicted vs Measured Back-Side Wall Temperatures for the Thruster Design Point

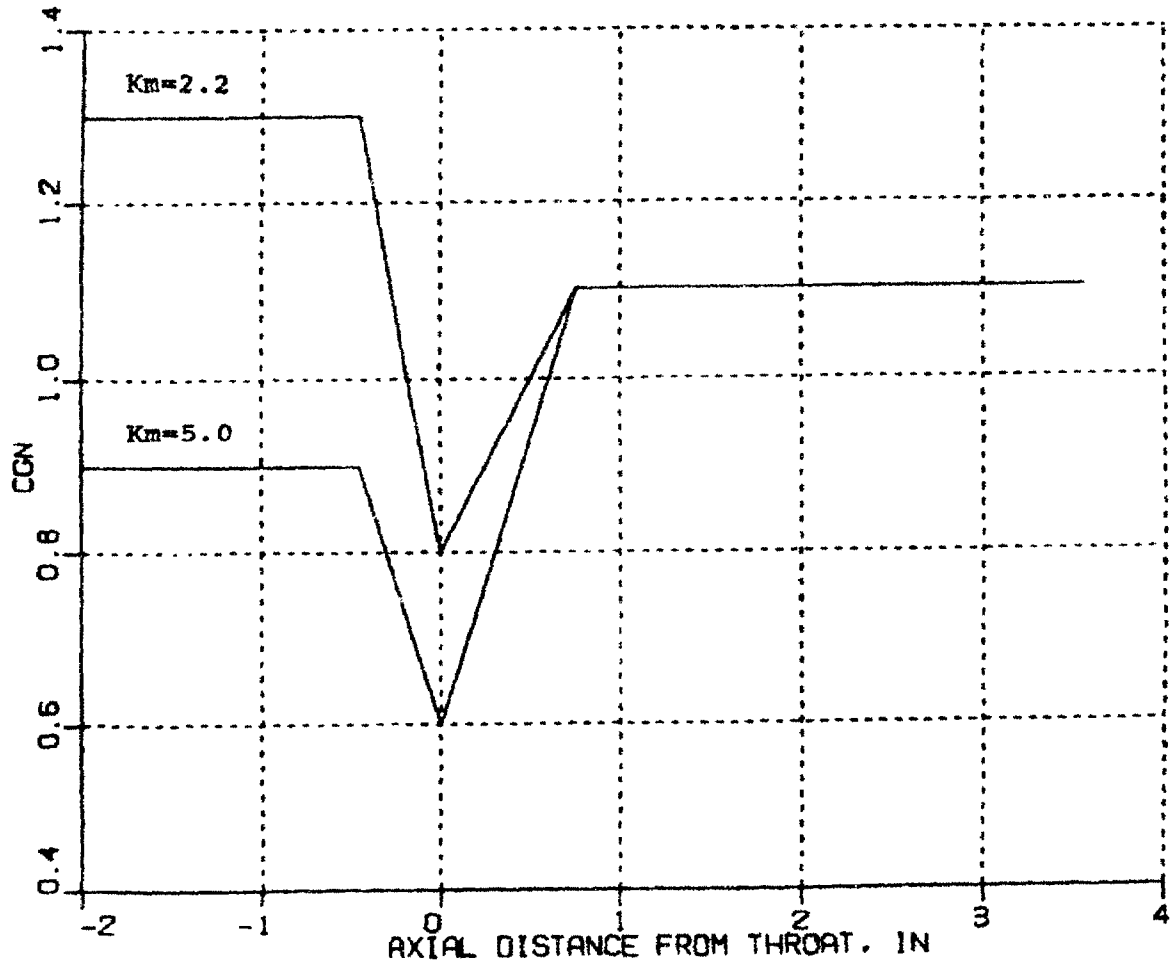

Figure 63. Cgn Profile for Calibrated Model

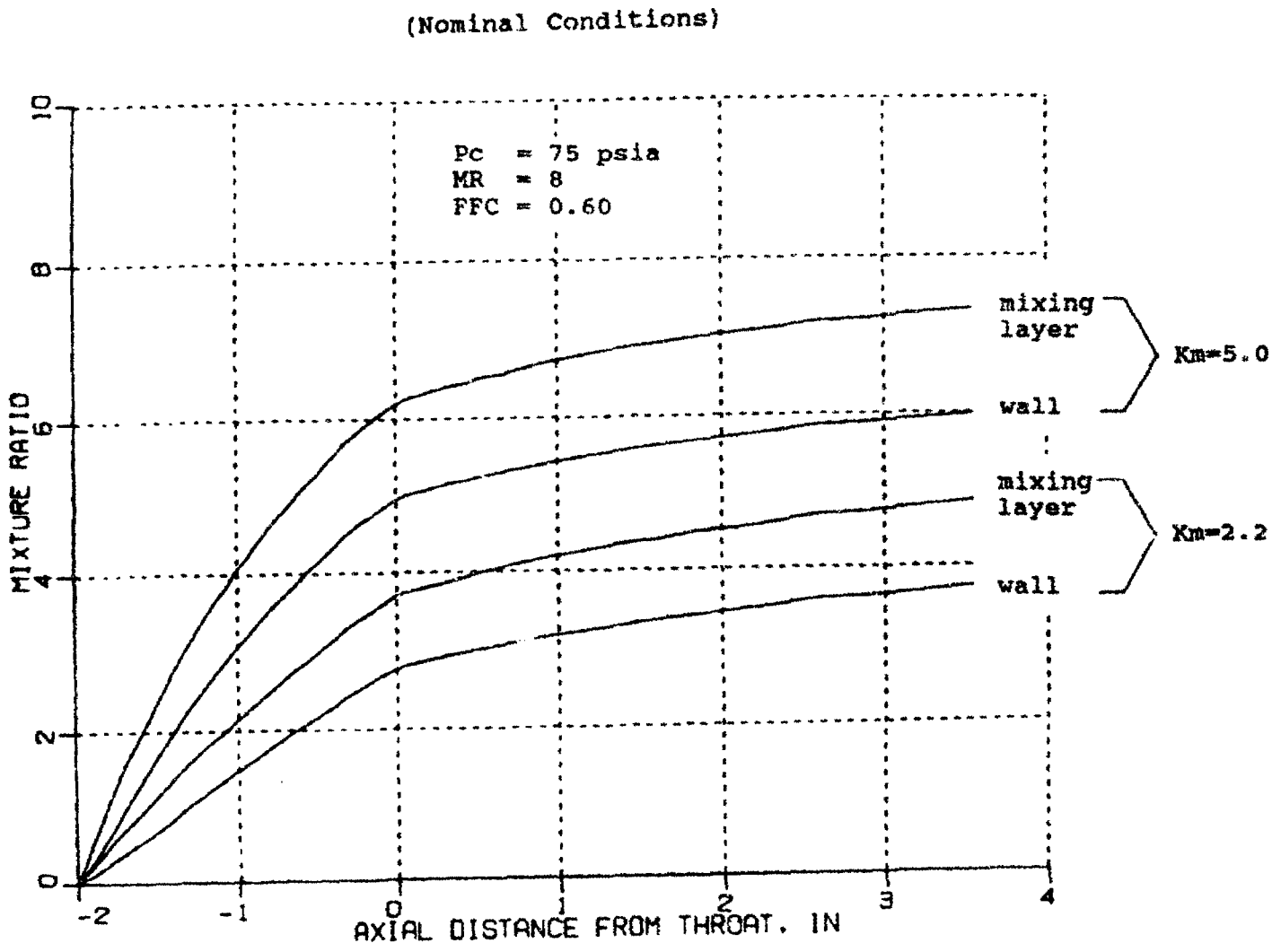

Figure 64. Predicted Stream Tube Mixture Ratios

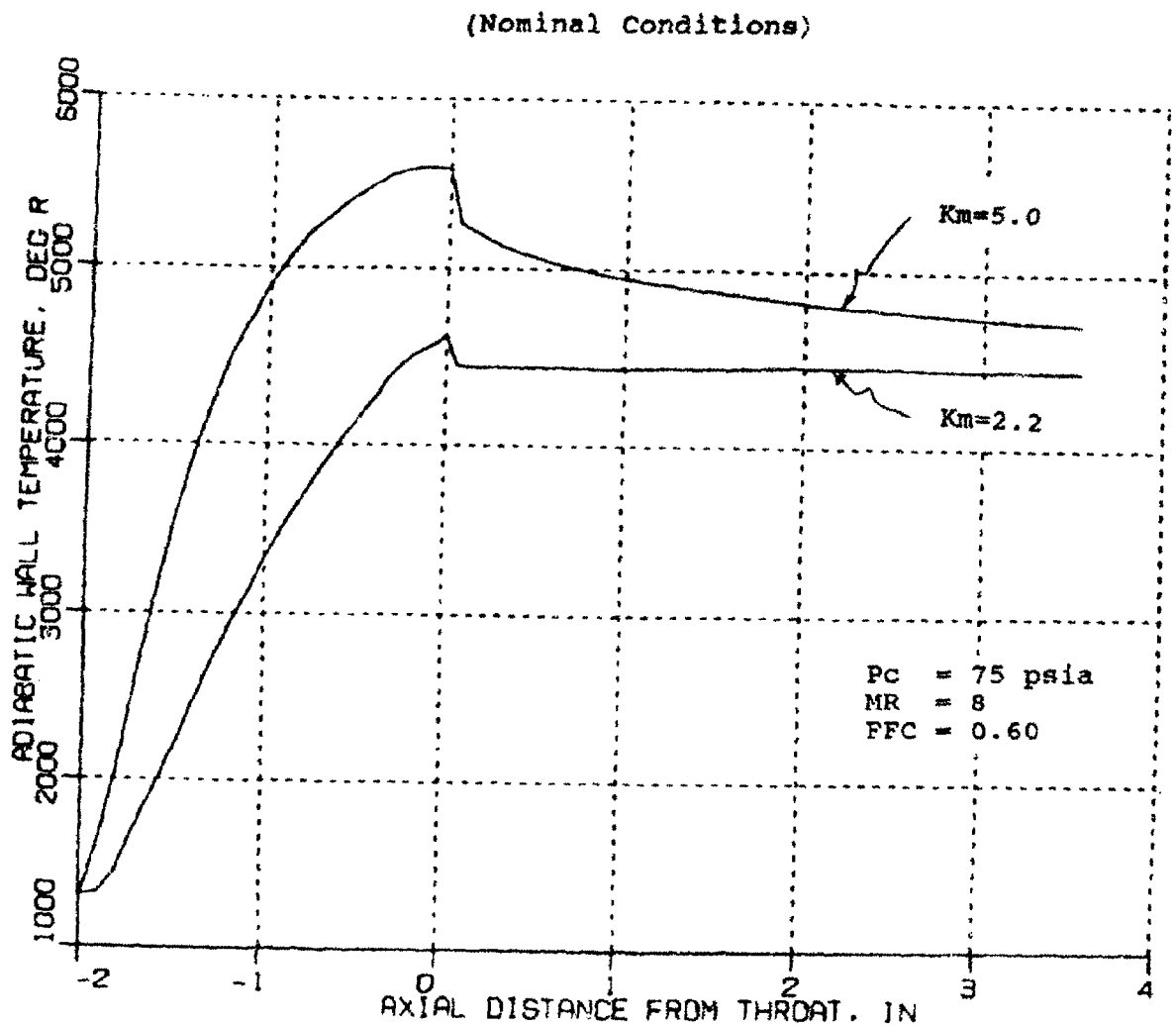

Figure 65. Predicted Adiabatic Wall Temperatures

(Off-Nominal Mixture Ratio)

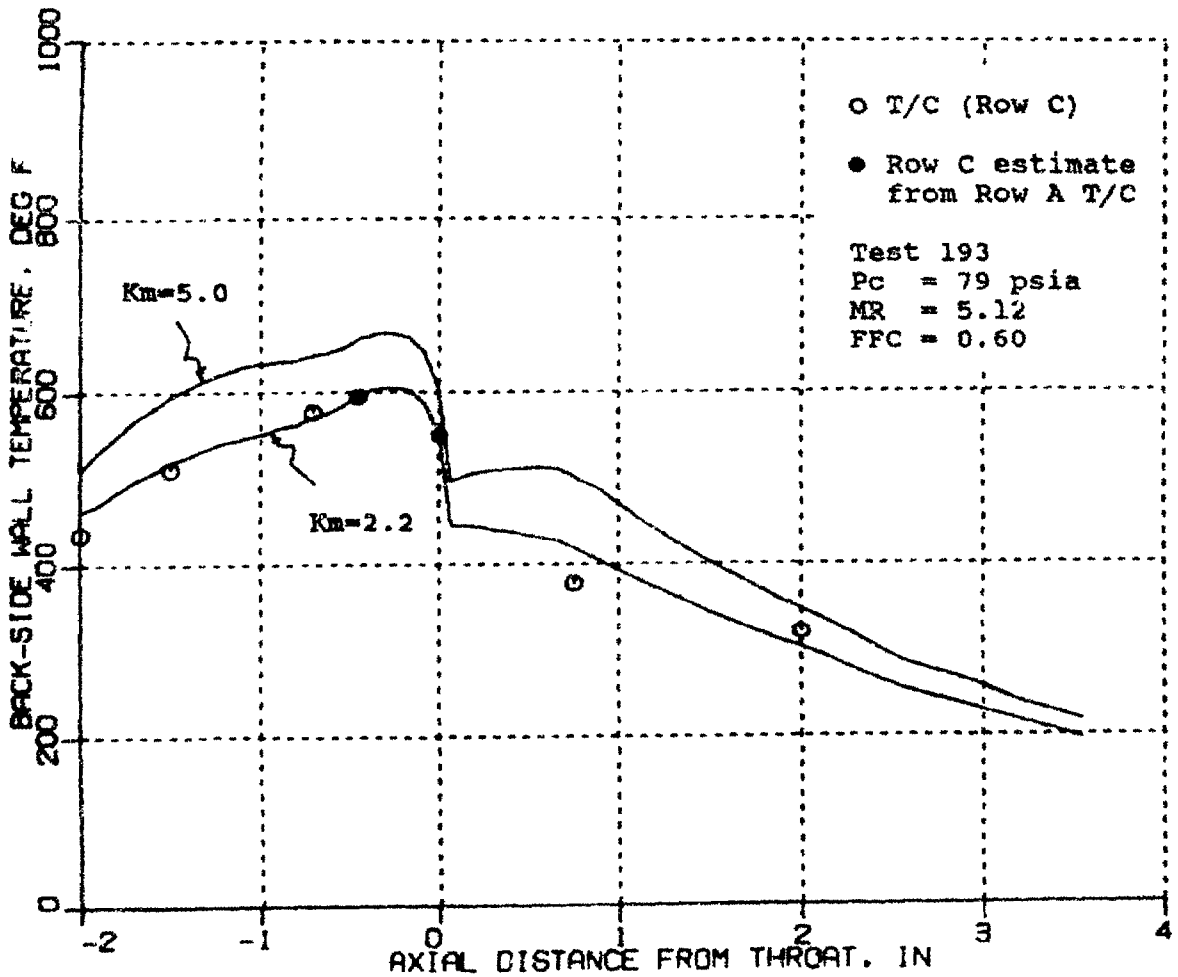

Figure 66. Predicted vs Measured Back-Side Wall Temperatures for Test No. 193

(Off-Nominal Mixture Ratio)

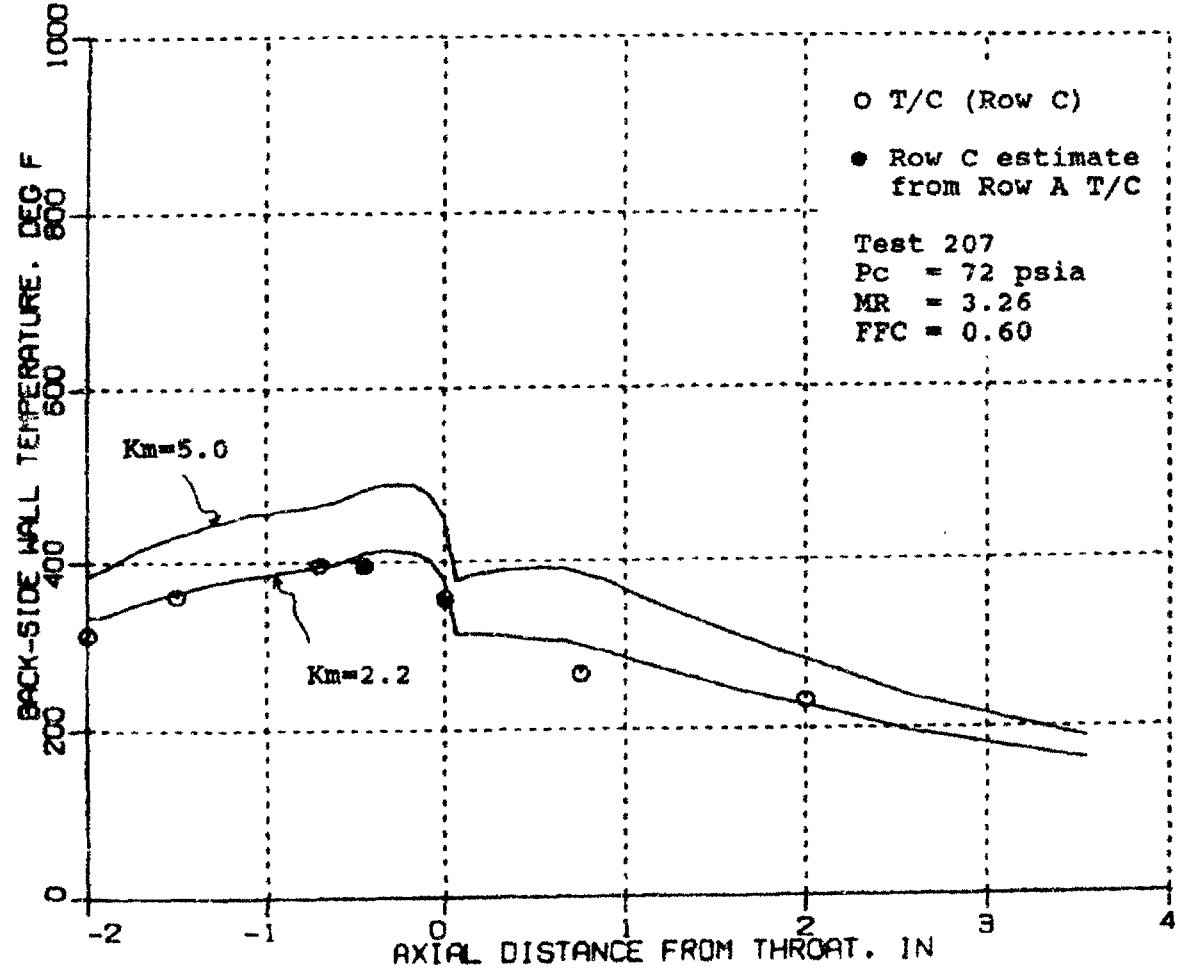

Figure 67. Predicted vs Measured Back-Side Wall Temperatures for Test No. 207

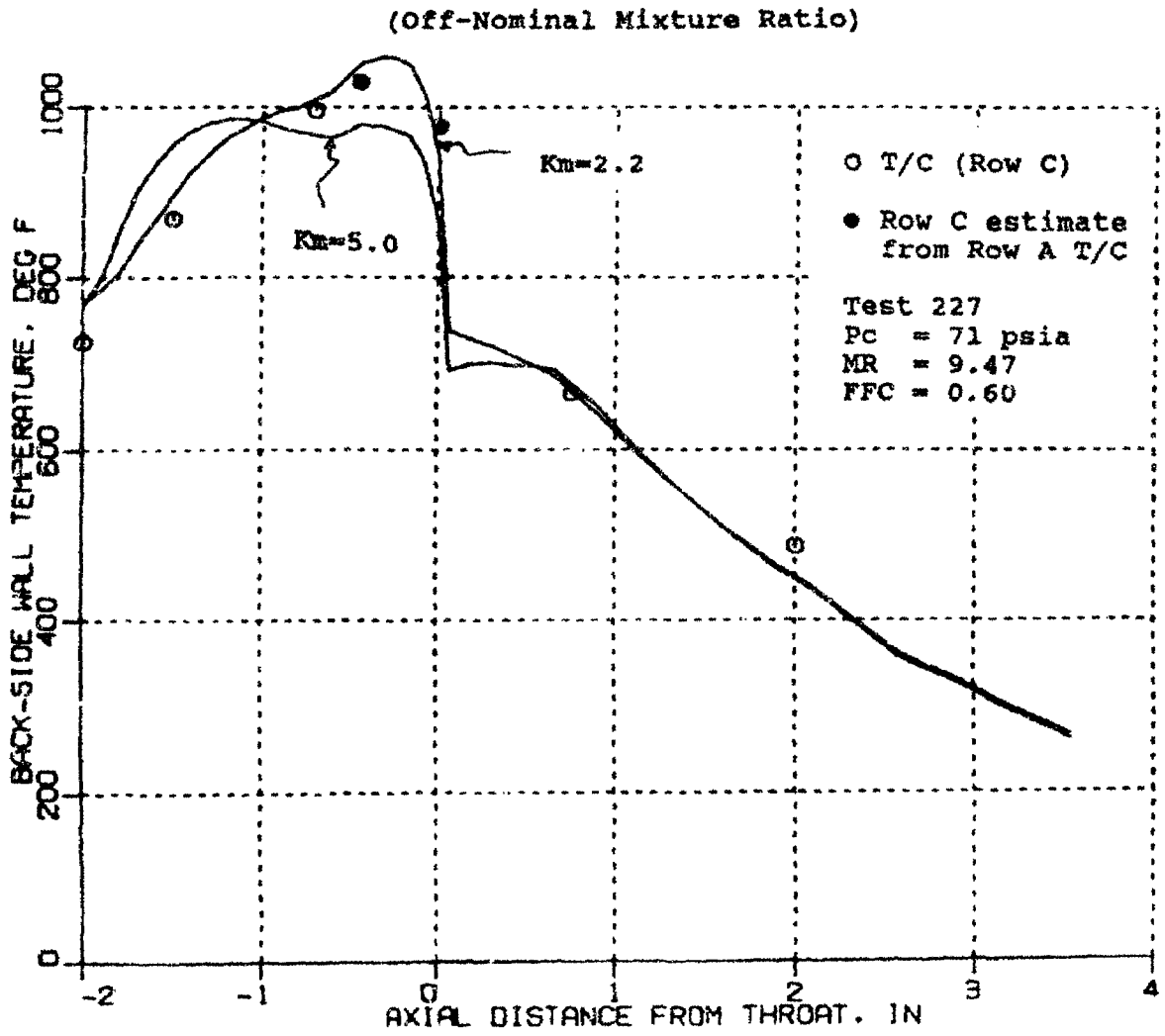

Figure 68. Predicted vs Measured Back-Side Wall Temperatures for Test No. 227

(Off-Nominal Fuel Film Cooling)

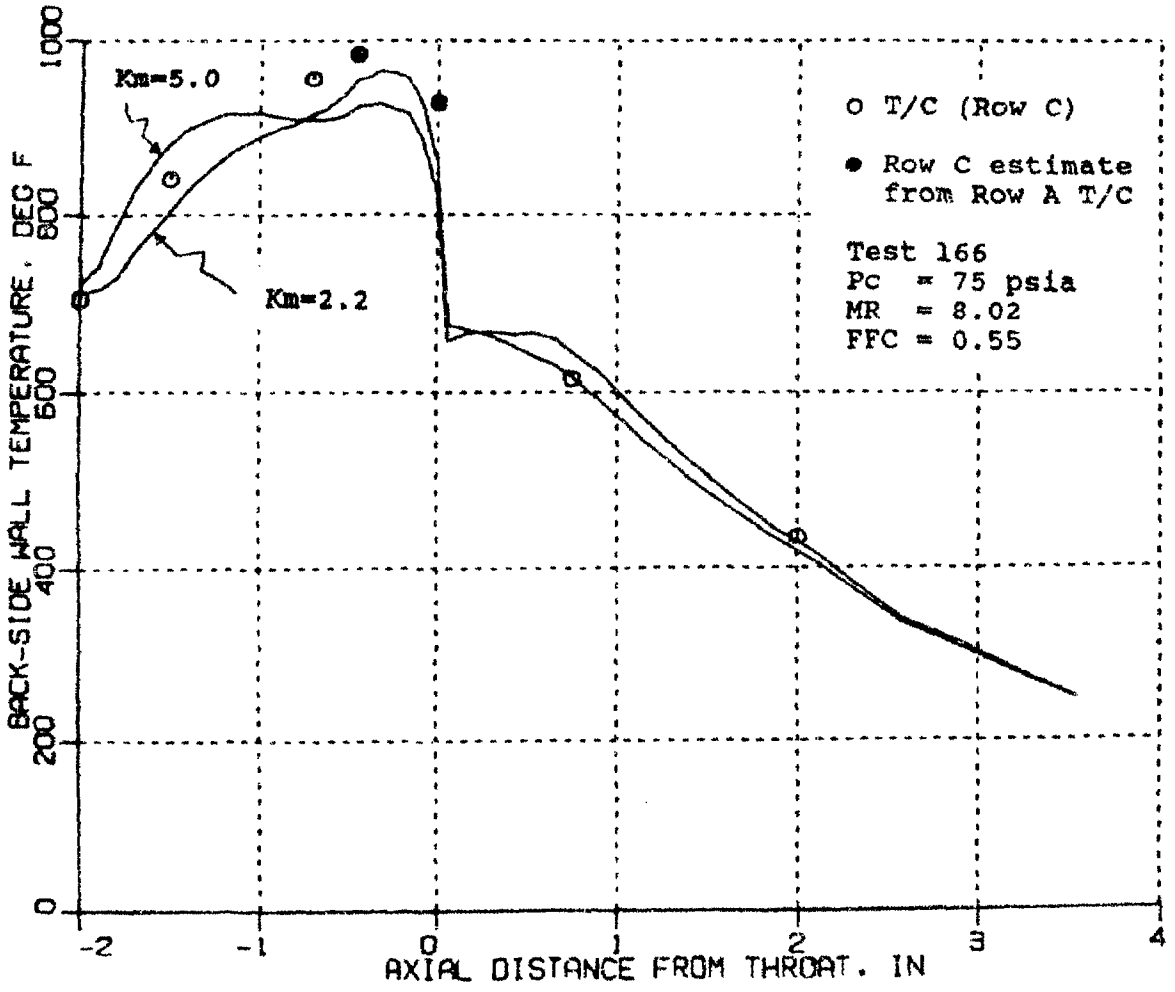

Figure 69. Predicted vs Measured Back-Side Wall Temperatures for Test No. 166

barrel, especially at higher mixture ratios. The faster mixing model tends to overpredict at lower than nominal mixture ratio and underpredict at higher than nominal mixture ratio. Both models under predicted the lower fuel film cooling test, although the slower mixing model matched the slope of the temperatures in the barrel. This indicates that a slightly higher Km value in the slower mixing model is necessary to match the 55% fuel film cooling condition.

Figure 70 shows the updated predictions of maximum gas-side and back-side wall temperatures for nominal conditions using the slower mixing (Km of 2.2) model. A maximum gas-side wall temperature of 1010 deg F is predicted just upstream of the throat. A maximum temperature difference between the gas-side and back-side of 89 deg F is also predicted just upstream of the throat. As previously discussed, such a low ΔT through the chamber wall resulted in a LCF life well in excess of 10,000 cycles due to the extremely small thermal strain range. In addition, the thruster surpassed the minimum criteria for creep rupture; therefore, the life limiting case would be high cycle fatigue (HCF).

Even though the performance data fit very well with predicted values, the former predictions were based on the old thermal model with its entrainment multiplier, Km, of 5.0. Therefore, performance predictions were made from the thermal model using the new Km of 2.2. Initially the mixing was assumed to be complete by the throat plane, as the previous predictions used this assumption with good results; however, the new predictions for a perfect injector (ERE = 100 percent) were too low, i.e., lower than the measured performance data. It was then assumed that some mixing did in fact occur downstream of the throat and the thermal mixing model determined mixing up to the nozzle exit plane. This output from the thermal model was used as input to the performance model, with the resulting performance predictions for a perfect injector forming effectively an upper limit on performance. These two sets of predictions were plotted in Figure 71 along with the same measured data that was plotted in Figures 53 and 54. The majority of the data lies just under the upper limit, thus substantiating the assumption that some mixing does in fact occur downstream of the throat plane. Furthermore, the effective injector ERE appears to range from 99.7 percent at an O/F of 3.0 to 98.5 percent at an O/F of 8.0, relative to the upper limit. This value of ERE is more consistent with the earlier ERE assumption of 97 percent, i.e., an improvement over the 96.1 percent ERE of Thruster No. 1.

To gain a better appreciation for the performance increase in going from the Thruster No. 1 design to the Thruster No. 2 design, Figure 72 was prepared. In this figure, the performance of Thruster No. 1 was plotted as a function of mixture ratio. A performance prediction

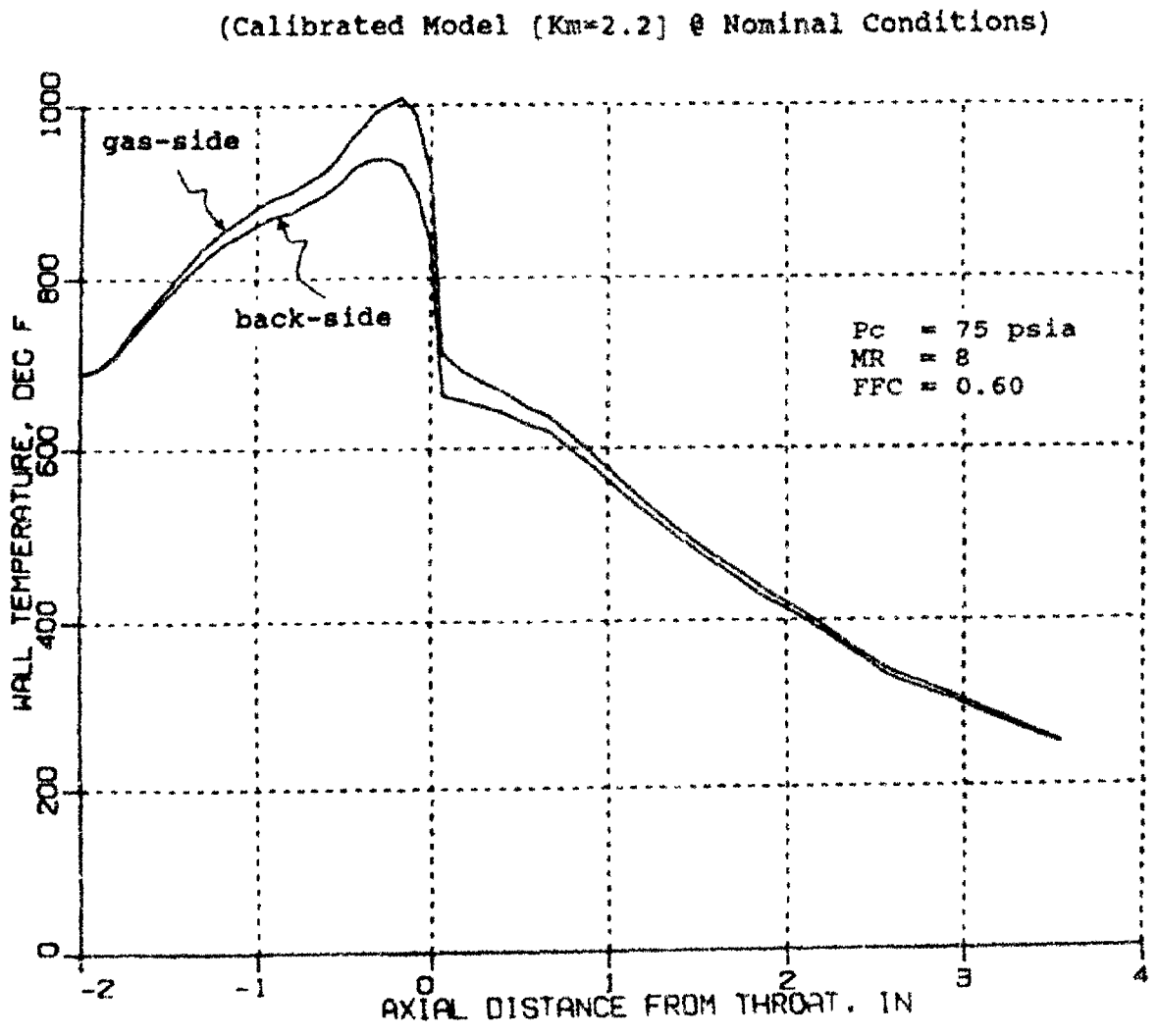

Figure 70. Predicted Maximum Wall Temperatures for Design Point

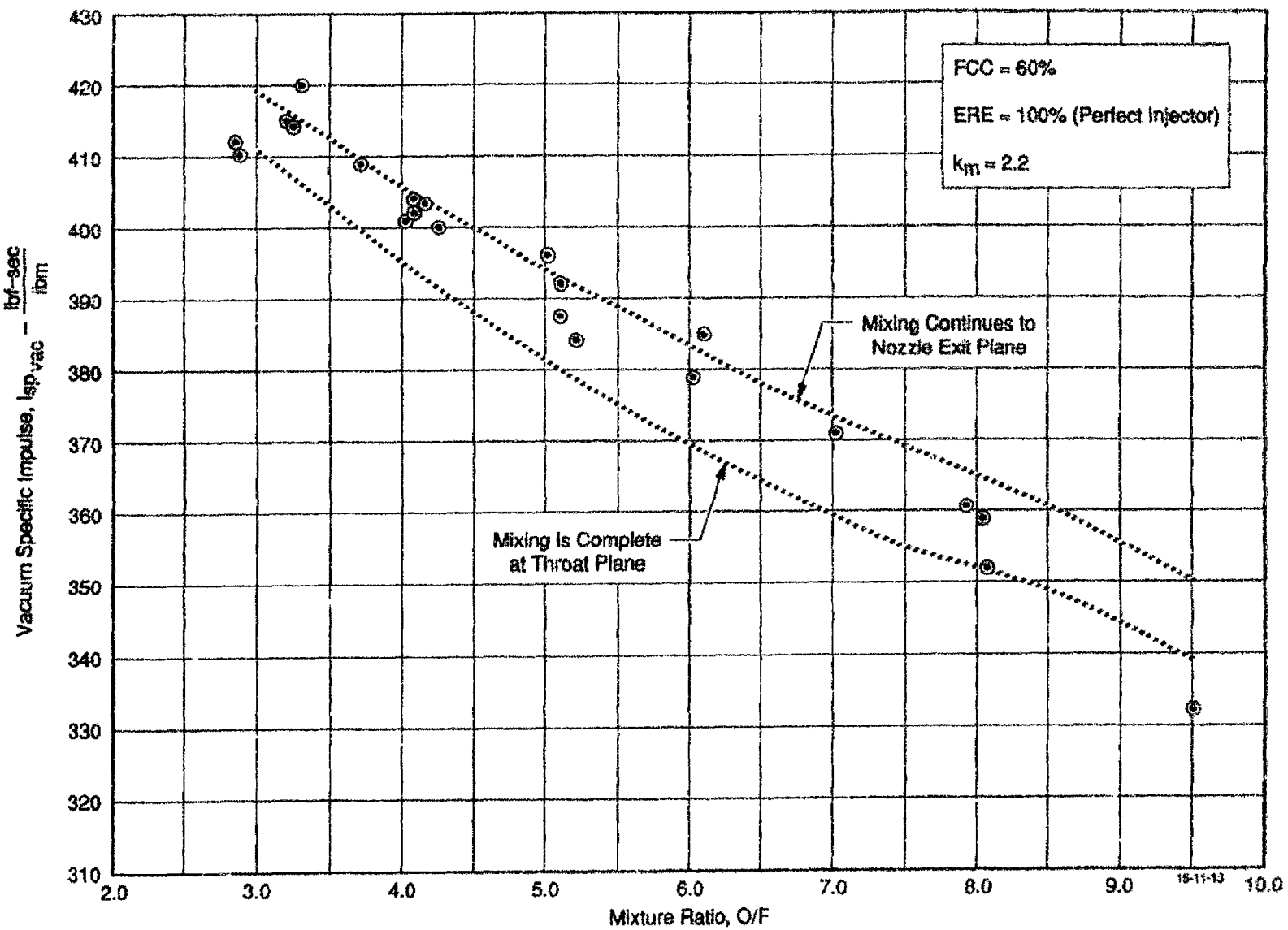

Figure 71. Revised Space Station Thruster Performance Predictions for Calibrated Thermal Model

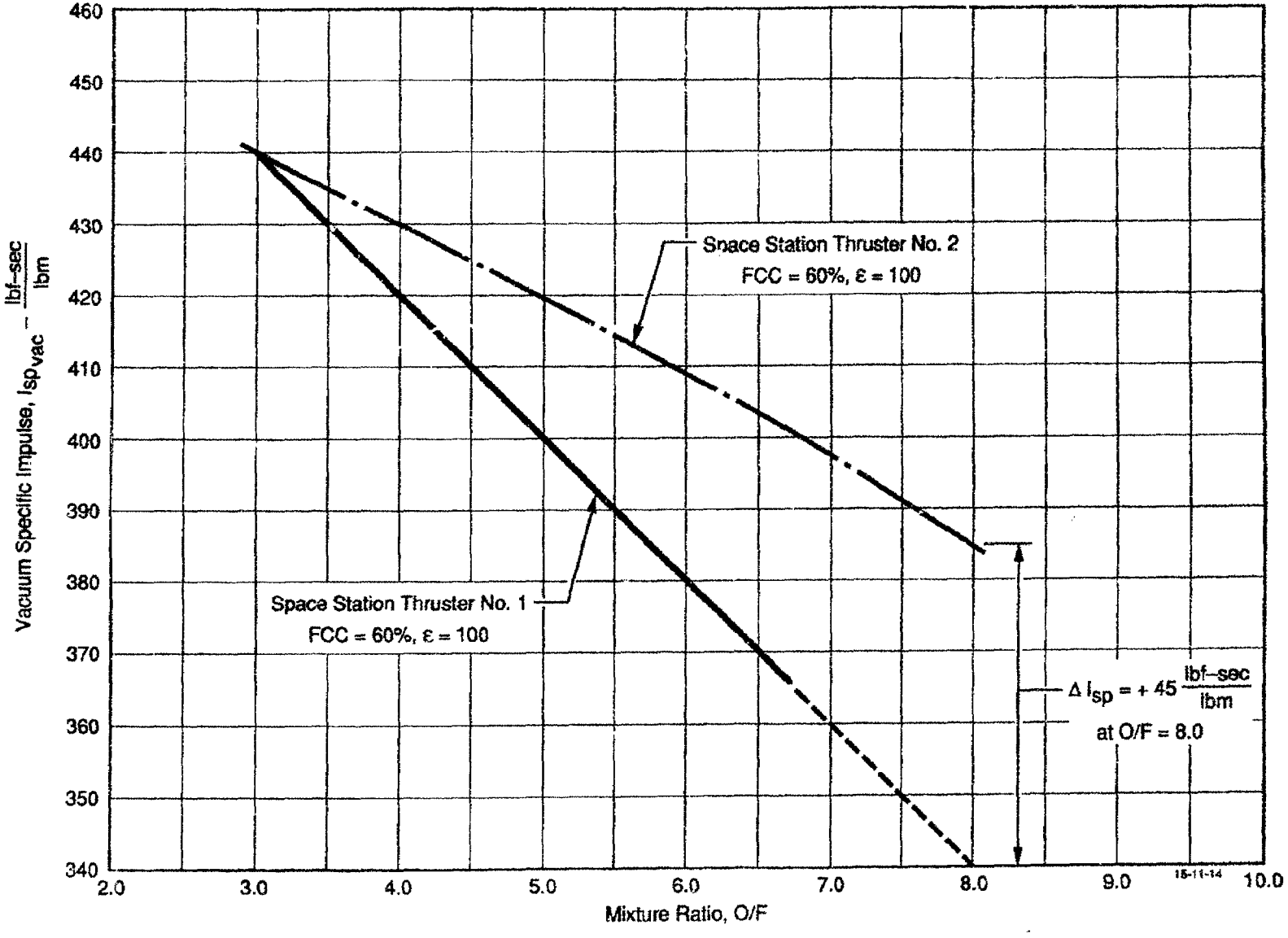

Figure 72. Performance Improvement for Space Station Thruster No. 2

was made for Thruster No. 2 using the revised thermal and performance models for an optimized 100:1 nozzle contour. This prediction for Thruster No. 2 was also plotted on Figure 72. The net result was an increase of specific impulse of 45 lbF-sec/lbM at an O/F of 8.0, a 13.2 percent increase. Therefore, the post test performance and hydraulic evaluations performed on Thruster No. 1, and used to guide the design of Thruster No. 2, were entirely correct.

F. CONCLUSIONS

The objective of the program funded by the NASA LeRC under Contract NAS 3-24398 was to establish a technical data base to support future development of GO_2/GH_2 flight thrusters for a Space Station Auxiliary Propulsion System (APS). Specific issues of concern were thruster performance and thrust chamber life. Through the design, fabrication and testing of the two 25 lbF GO_2/GH_2 thrusters described in this final report, it is clear that a significant technical data base has been established to guide future development of the flight thrusters for the Space Station APS. Furthermore excellent specific impulse values over a mixture ratio range of 3.0 to 8.0 were achieved, along with very small temperature gradients through the thrust chamber wall. This low ΔT (89°F) results in an insignificant thermal strain range (0.2 percent), yielding a predicted low cycle fatigue life well in excess of 10,000 cycles. With creep rupture not an issue, the life limiting mechanism is high cycle fatigue, which means that the thrust chamber itself would not be the life limiting component. This conclusion is further supported by the absence of any streaking on the chamber walls which could cause premature failure. The technical development of the GO_2/GH_2 thrusters has been successful and flight development can be initiated.

V. REFERENCES

1. Rosenberg, S.D., Aitken, A.J., Jassowski, D.M., and Royer, K.F., "Ignition Systems for Space Shuttle Auxiliary Propulsion System," NASA CR-72890, 1972. NASA Contract NAS 3-14348.

2. Schoenman, L., "Hydrogen-Oxygen Auxiliary Propulsion for Space Shuttle," NASA CR-120895, Aerojet Liquid Rocket Co., Sacramento, CA, January 1973.

3. Blubaugh, A.L. and Schoenman, L., "Extended Temperature Range ACPS Thruster Investigation," NASA CR-134655, Aerojet Liquid Rocket Co., August 1974. NASA Contract NAS 3-16775.

4. Berkman, D.K. and Schoenman, L., "Oxygen/Hydrogen Thrusters for Space Station Auxiliary Propulsion Systems," Final Report 956457-F-1, Aerojet TechSystems Company, August 1984. JPL Contract 956457.

5. Dowdy, M.W. and Appel, M.A., "High Temperature Gaseous Oxygen/Hydrogen Thrusters for Space Station," Jet Propulsion Laboratory, CIT, Pasadena, CA.

6. Ewen, R.L., et al, "Combustion Effects on Film Cooling," HOCOOL Users Manual, Contract NAS 3-17813, Aerojet Liquid Rocket Co., 15 July 1975.

7. Rousar, D.C. and Ewen, R.L., "Combustion Effects on Film Cooling," NASA CR-135052, Aerojet Liquid Rocket Co., 24 February 1977.

8. Nickerson, G.R., Coats, E.E., and Bartz, J.L., "Two-Dimensional Kinetic Reference Computer Program-TDK," NAS 9-12652, December 1973.

9. Weigold, H.D. and Zupnik, T.F., "Turbulent Boundary Layer Nozzle Analysis Computer Program-TBL," Prepared for the ICRPG Performance Standardization Working Group, AD841202, Aerojet, July 1968.

10. Calhoon, D.F., Ito, J.I., and Kors, D.L., "Investigation of Gaseous Propellant Combustion and Associated Injector/Chamber Design Guidelines," Final Report, NASA CR 121234, Aerojet Liquid Rocket Company, Sacramento, CA, July 1973. NASA Contract 3-14379.

11. Manson, S.S. and Halford, G., "A Method of Estimating High-Temperature Low-Cycle Fatigue Behavior of Materials," Prepared for the International Conference on Thermal and High-Strain Fatigue, Monograph and Report Series No. 32, The Metals and Metallurgy Trust, London, England, 1967.

12. Walker, R.E. and Kors, D.L., "Multiple Jet Study Final Report," NASA CR 121217, Aerojet Liquid Rocket Company, Sacramento, CA, June 1973. NASA Contract NAS 3-15703.

13. Walker, R.E. and Eberhardt, R.G., "Multiple Jet Study Data Correlations," NASA CR 134795, Aerojet Liquid Rocket Company, Sacramento, CA, April 1975. NASA Contract NAS 3-18026.

APPENDIX A

DETAILED DRAWINGS
SPACE STATION THRUSTER NO. 1

Drawing No.	Title
1198364	Bracket Valve
1198369	Spark Igniter
1198380	Engine Assembly, Space Station
1198381	Platelet, Flow Balancing
1198382	Chamber Assembly
1198383	Body, Igniter
1198384	Chamber Sleeve Assembly
1198385	Igniter Body and Platelet Assembly
1198558	Body, Igniter
1198559	Igniter Body and Platelet Assembly
1198674	Fitting
1198675	Plate, Thrust
1198692	Spark Igniter
1198832	Gasket, Spark Igniter

NOTES:

1. INTERPRET DRAWING PER ATC-STD-1020.
2. ETCH PER ATC-68751.
3. MARK PER AS478-7A WITH L198369 AND APPLICABLE DASH NUMBER.

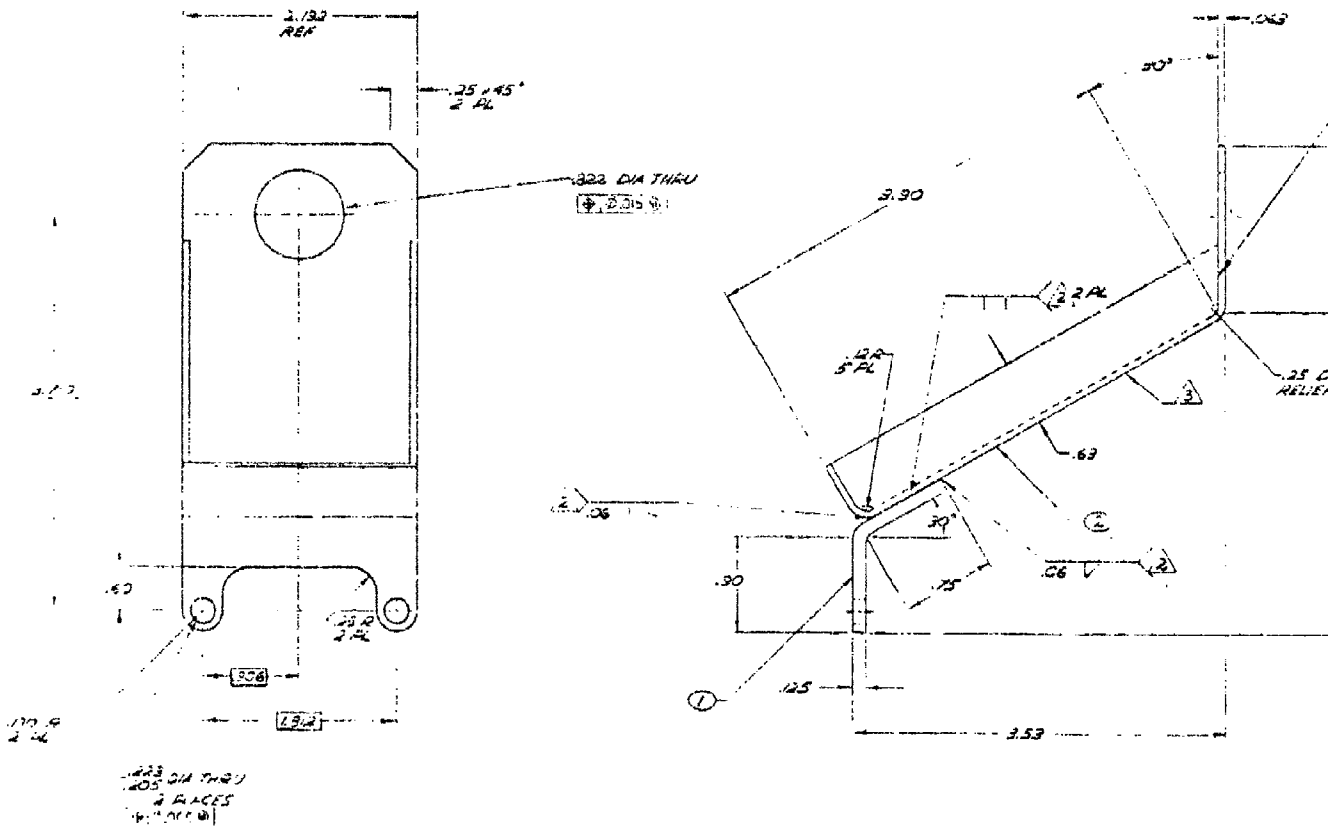

DEVELOPMENT HA
FOR TEST OR EXPERIM

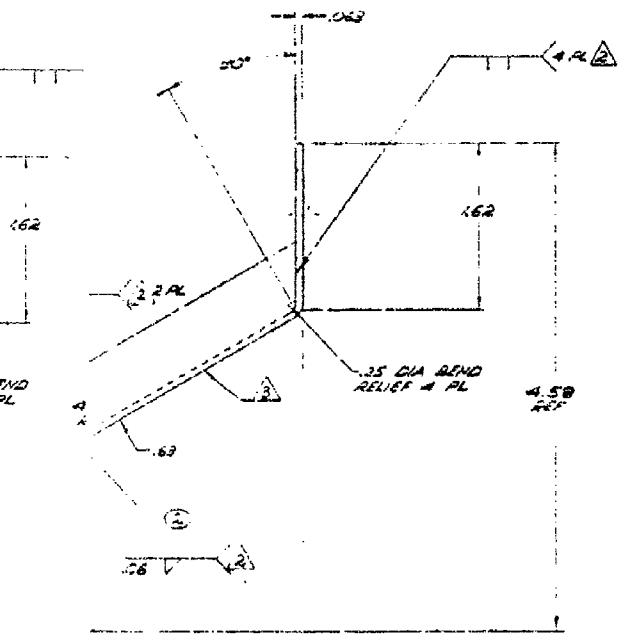

FOR RECORD ONLY. DO NOT FABRICATE TO THIS PRINT.
X RETAIN ORIGINAL VELLUM UNTIL July 1990
___ DESTROY ORIGINAL VELLUM AFTER MICROFILMING
AUTHORIZED CHECKER RR Wilson 10-2-85

1198364

AR			WELD MOE	AWS A5.9 CL ER-349	2
1		-2		CRES	2
1		-1		CRES	1

TechSystems

BRACKET, VALVE

E 05824 1198364

89-9-20 1 OF 1

DEVELOPMENT HARDWARE
FOR TEST OR EXPERIMENTATION

A-2

NOTES

1. INTERPRET DRAWING PER ATC-STD-4978.
2. MARK PER AS478-7A WITH 1198369 AND APPLICABLE DASH NO. OBLITERATE ORIGINAL IDENTIFICATION WITHOUT DAMAGE TO THE PART.
3. ALTER AS SHOWN.

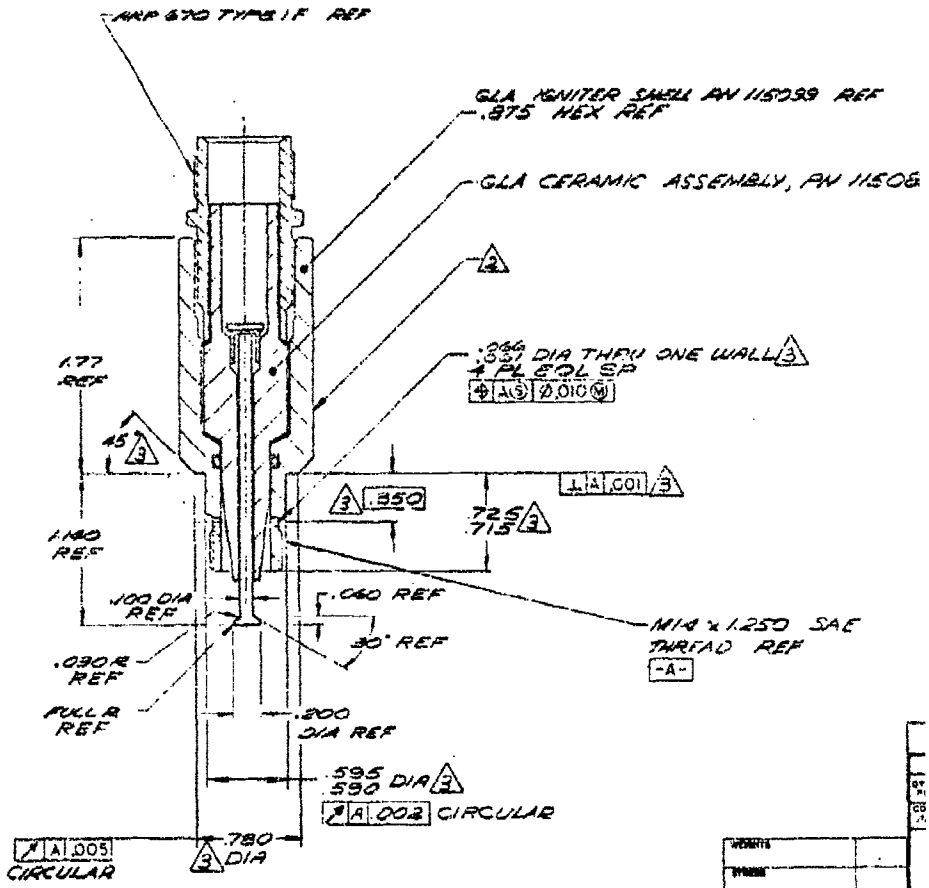

DEVELOPMENT HARDWARE
FOR TEST OR EXPERIMENTATION

REVISIONS			
LTR	DESCRIPTION	RELEASE DATE	APPROVED

IGNITER SMALL PN 115099 REF
HEX REF

CERAMIC ASSEMBLY, PN 115099 REF

REF

DIA THRU ONE WALL
BOLT SP
.010 M

⊥ A .001

M14 x 1.250 SAE
THREAD REF
-A-

FOR RECORD ONLY. DO NOT FABRICATE TO THIS PRINT.
X RETAIN ORIGINAL VELLUM UNTIL APRIL 1990
___ DESTROY ORIGINAL VELLUM AFTER MICROFILMING
AUTHORIZED CHECKER [illegible] 89-9-25

ALTERED ITEM DRAWING

1198369

QTY REQD PER ASSY	ITEM NO.	PART OR IDENTIFYING NO.	NOMENCLATURE OR DESCRIPTION	MATERIAL SPECIFICATION	ITEM NO.
		-1		ALTER FROM SLA SPARK IGN. SEE PN 48510	

PARTS LIST

CONTRACT NO. NAS 9-24398
UNLESS OTHERWISE SPECIFIED: DIMENSIONS & TOLERANCES ARE IN INCHES & PER ANSI Y14.5
TOLERANCES: DECIMALS .XX ±.03, .XXX ±.010; ANGULAR ±1°
SURFACE ROUGHNESS
DO NOT SCALE DRAWING
DWG. LEVEL 2

DRAWN S. Buchanan DATE 5-6-8
CHECK
DESIGN [illegible] 9-6-89
DESIGN ACTIVITY [illegible] 9-6-89

TechSystems COMPANY

TITLE: SPARK IGNITER

SIZE D | PICK NO. 05824 | DWG NO. 1198369
SCALE 2/1 | RELEASE DATE 89-9-26 | R | SHEET 1 OF 1

THIS DWG HAS BEEN REVIEWED PER POLICY 5711.

NT HARDWARE
XPERIMENTATION

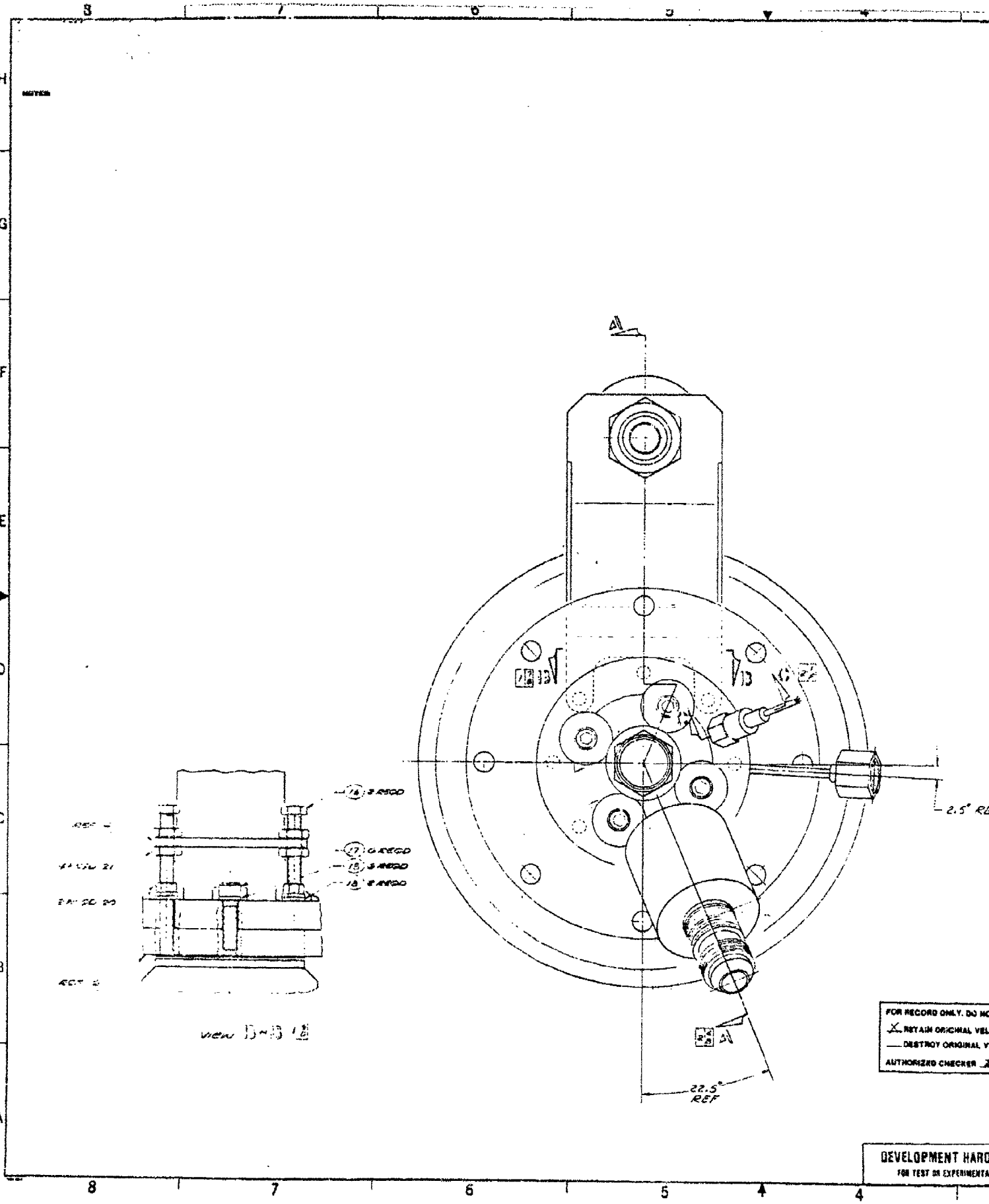
A
2.5° REF
22.5° REF
A
view B-B
FOR RECORD ONLY. DO NO
RETAIN ORIGINAL VEL
DESTROY ORIGINAL V
AUTHORIZED CHECKER
DEVELOPMENT HARD
FOR TEST OR EXPERIMENTA

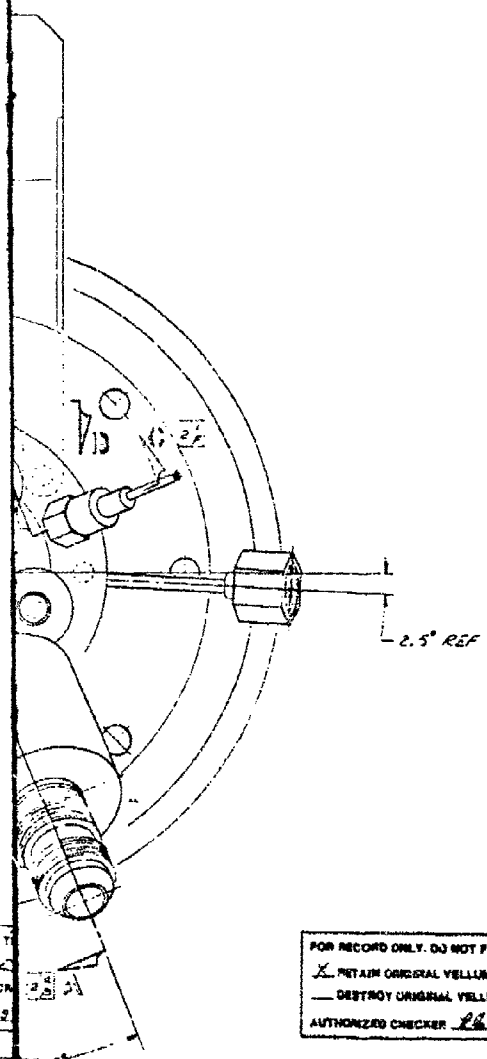

8	8			O-RING		26
1	1	08959	AR1G4174	SEAL ASSY		24
						23
1	1		AN924-6U	NUT		22
4	4		MS35650-304	NUT		21
6	6		MS21042-3	NUT		20
8	8		MS16001L	WASHER		19
6	6		MS35843-1	SCREW		17
6	6		MS35842-5	SCREW		16
						15
						14
1	1			TRANSDUCER, PRESSURE		13
2	2			SOLENOID VALVE		12
			1198631-1	SAFE SPARK CENTER CATCH		11
1			1198631-1	SAFE SPARK CENTER CATCH		10
	1		1198309-1	SPACER, SAFE SPARK CENTER		9
1			1198659-9	BOOVE PLATE ASSY		8
	1		1198386-3	BOOT PLATE ASSY		7
1	1		1198678-1	PLATE, THRUST		6
1	1		1198676-1	FITTING		5
1	1		1198664-9	BRACKET, VALVE MOUNT		4
1	1		1198391-1	ROW SOL CHAMBER		3
1	1		1198394-3	SLEEVE ASSY CHAMBER		2
1	1		1198385-3	ASS'EMBLY		1
ITEM NO.	NUMBER REQD.	PART OR IDENTIFYING NO.	NOMENCLATURE OR DESCRIPTION	MATERIAL SPECIFICATION	REQD	ITEM NO.

PARTS LIST

FOR RECORD ONLY. DO NOT FABRICATE TO THIS PRINT.
X RETAIN ORIGINAL VELLUM UNTIL JUNE 1990
— DESTROY ORIGINAL VELLUM AFTER MICROFILMING
AUTHORIZED CHECKER [illegible]

DEVELOPMENT HARDWARE
FOR TEST OR EXPERIMENTATION

DO NOT SCALE DRAWING

TechSystems

ENGINEER [illegible] 30-9-86
DRAWN [illegible] 30-9-86
CHECKED [illegible] 30-9-86
APPROVED [illegible] 30-9-86

TITLE ENGINEER ASSEMBLY, SPACE STATION

SIZE E | FSCM NO. 05824 | DRAWING NO. 1198380

SCALE 2:1 | RELEASE DATE 30-9-86 | SHEET 1 OF 2

1198380

A-4

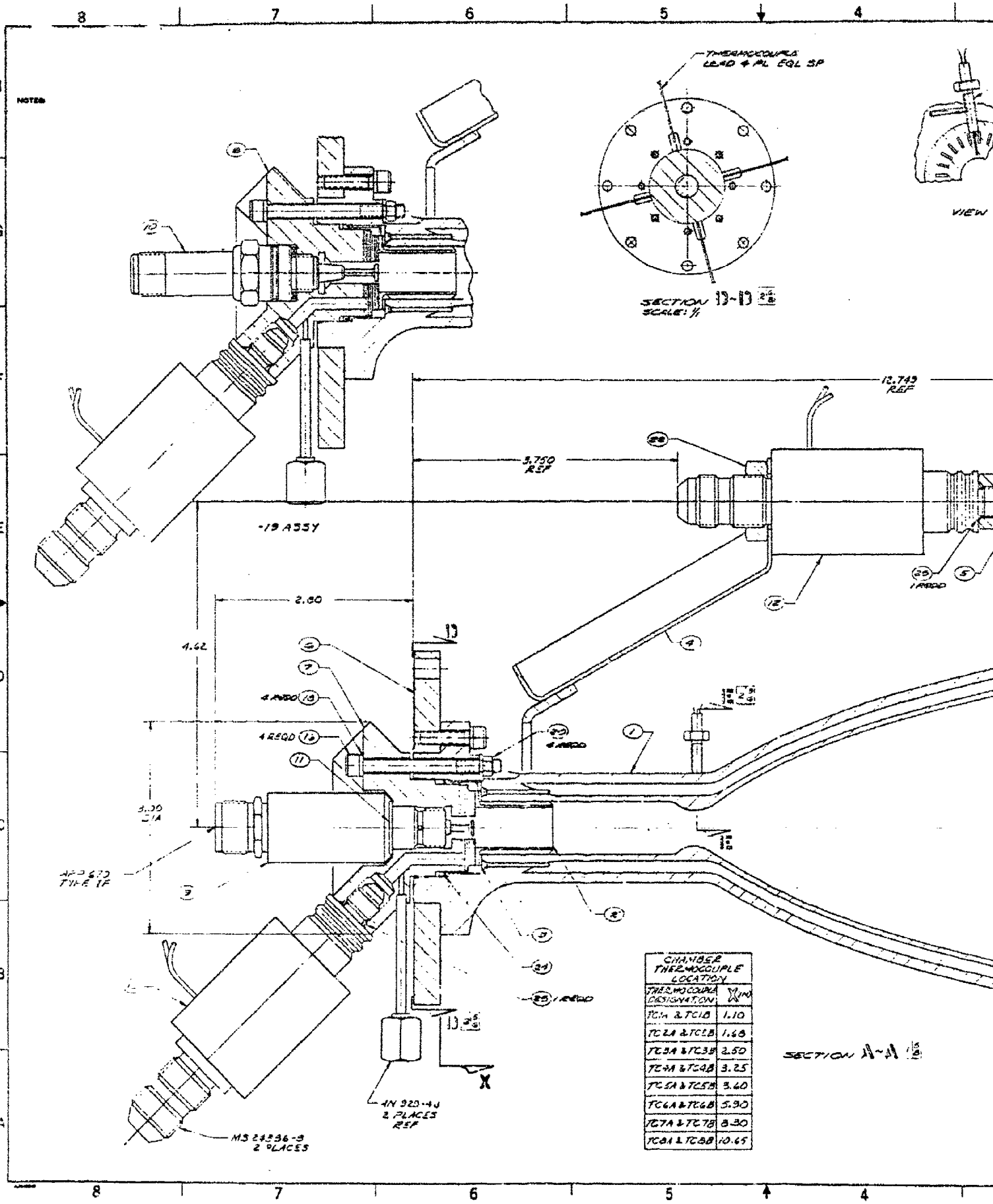

CHAMBER THERMOCOUPLE LOCATION	
THERMOCOUPLE DESIGNATION	X (IN)
TC1A & TC1B	1.10
TC2A & TC2B	1.68
TC3A & TC3B	2.50
TC4A & TC4B	3.25
TC5A & TC5B	3.60
TC6A & TC6B	5.90
TC7A & TC7B	8.30
TC8A & TC8B	10.65

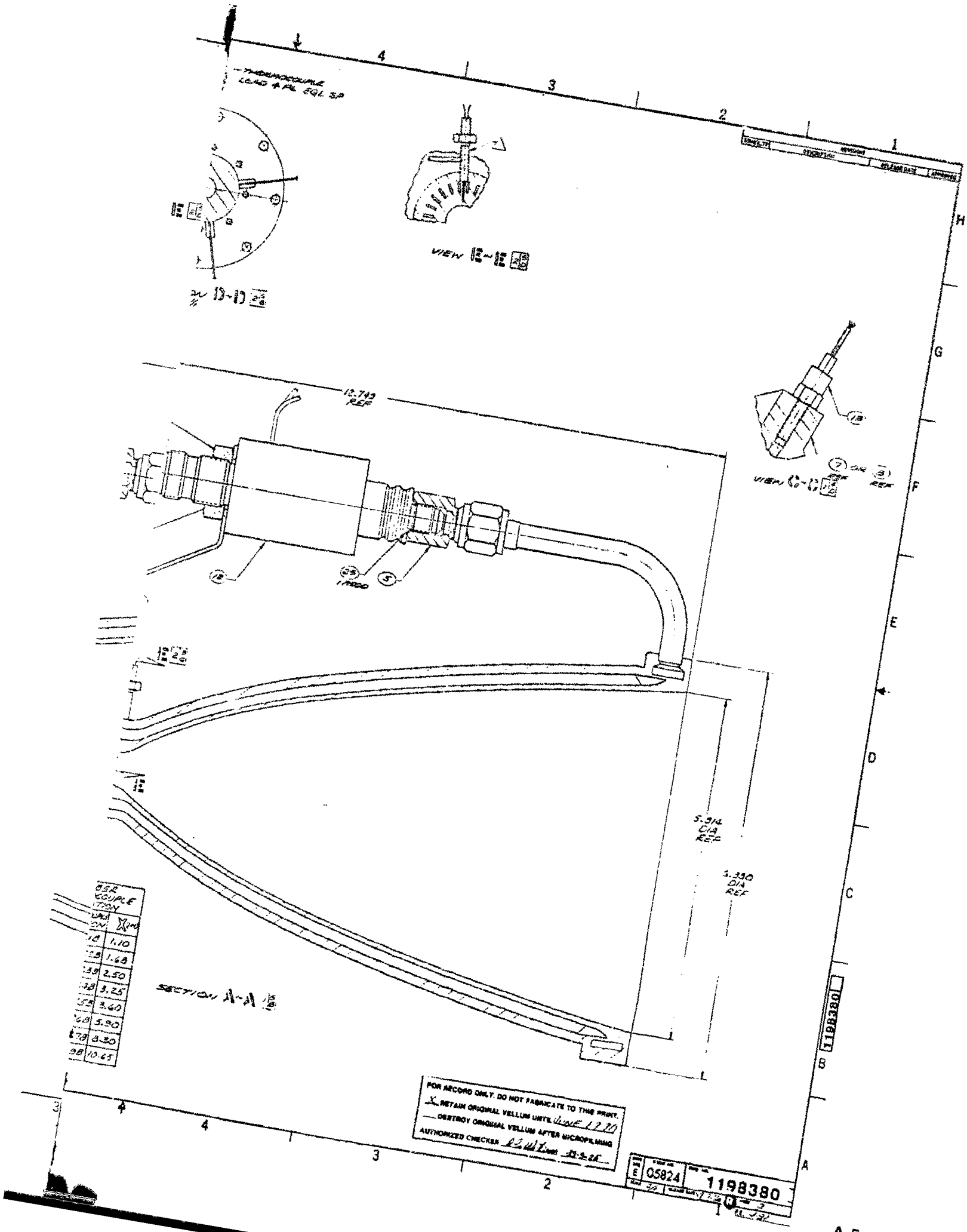
THERMOCOUPLE LEAD & PL EQL SP
VIEW D-D
VIEW E-E
VIEW C-C
12.743 REF
5.314 DIA REF
5.330 DIA REF
SECTION A-A
FOR RECORD ONLY. DO NOT FABRICATE TO THIS PRINT.
RETAIN ORIGINAL VELLUM UNTIL
DESTROY ORIGINAL VELLUM AFTER MICROFILMING
AUTHORIZED CHECKER
Q5824
1198380

NOTES:

1. INTERPRET DRAWING PER ATC-STD-4926.
2. FOR MATERIAL THICKNESS AND NEGATIVE NUMBER, SEE TABLE.
3. PLATELET MATERIAL SURFACE CONDITION SHALL BE FREE OF CUTS, DENTS AND SCRATCHES.
4. PHOTOCHEMICALLY ETCH PLATELETS PER ATC-67137.
5. DIMENSION INDICATED IS TO BE USED AS THE CONTROLLING FEATURE DURING ETCHING PROCESS.
6. INSPECT AND RECORD ALL CRITICAL DIMENSIONS INDICATED.
7. MARK PER AS679-37 WITH 1198381 AND APPLICABLE DASH NUMBER.

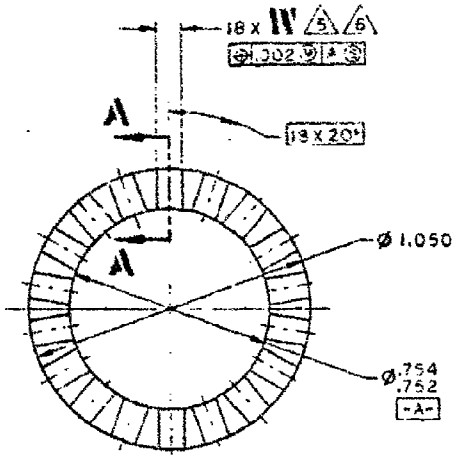

18 X D

SEC

DASH NO.	T THICK (2)	W WIDE	D DEEP	NEGATIVE NUMBERS (2)
-1	.010	.025	.005-.006	3713
-2	.010	.036	.005-.006	3714
-3	.010	.058	.005-.006	3715
-4	.010	.078	.005-.006	3716
-5	.010	—	—	3717
-6	.020	—	—	3718
-7	.020	.100	.010-.011	3719
-8	.010	.100	.005-.006	3720

FOR RECORD ONLY. DO NOT FABRICATE TO THIS PRINT.

X RETAIN ORIGINAL VELLUM UNTIL JAN 1993

___ DESTROY ORIGINAL VELLUM AFTER MICROFILMING

AUTHORIZED CHECKER R.L. Wilson 30-9-75

DEVELOPMENT HARDWARE

FOR TEST OR EXPERIMENTATION

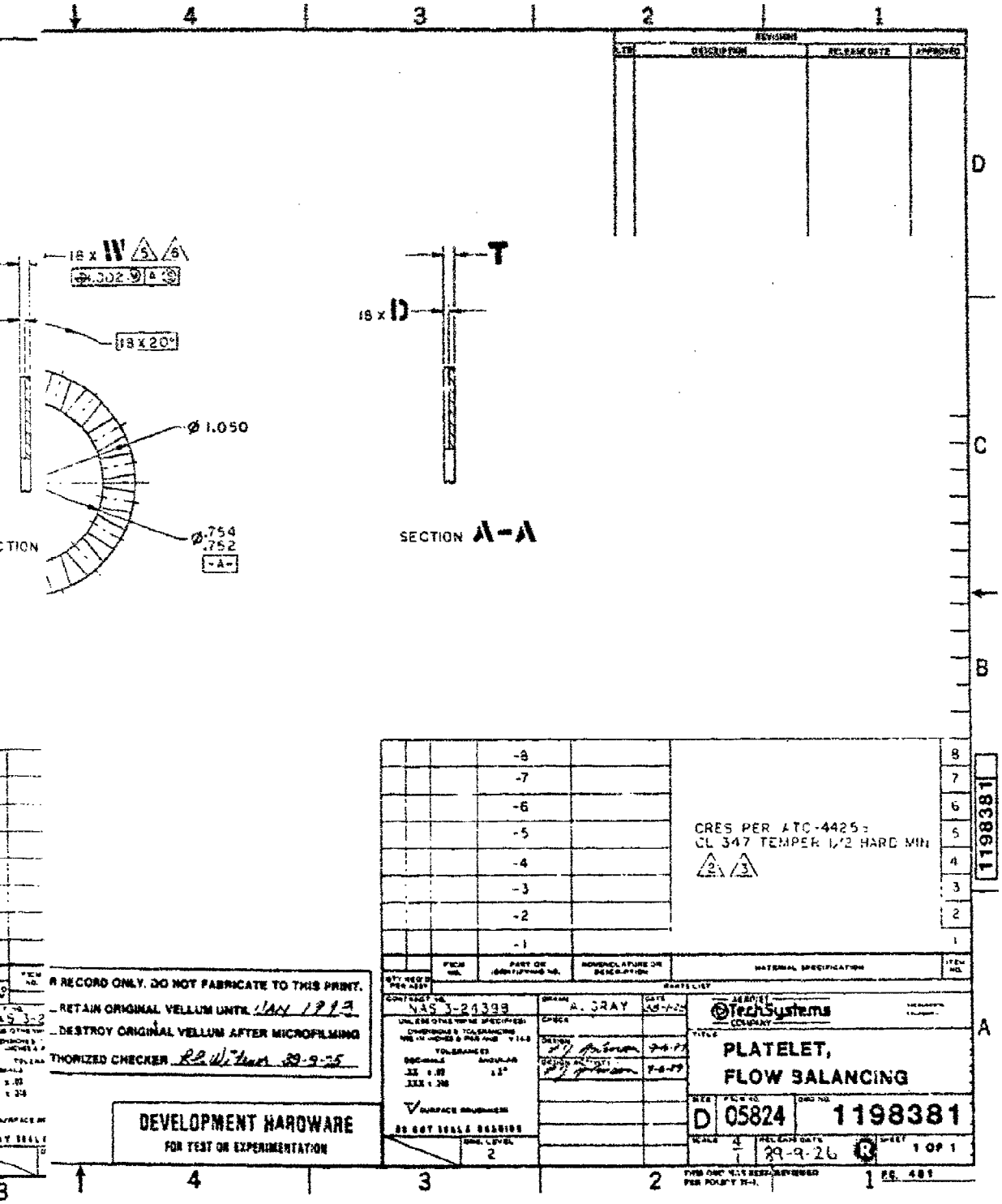
18 x W
18 x 20°
Ø 1.050
Ø.754
.752
-A-
18 x D
T
SECTION A-A
CRES PER ATC-4425:
CL 347 TEMPER 1/2 HARD MIN
1198381
R RECORD ONLY. DO NOT FABRICATE TO THIS PRINT.
RETAIN ORIGINAL VELLUM UNTIL JAN 1979
DESTROY ORIGINAL VELLUM AFTER MICROFILMING
THORIZED CHECKER
DEVELOPMENT HARDWARE
FOR TEST OR EXPERIMENTATION
NAS 3-24399
A. GRAY
TechSystems COMPANY
PLATELET,
FLOW BALANCING
D
05824
1198381
1 OF 1

NOTES:

1. INTERPRET DRAWING PER ATC-STD-4928.
2. ALL DIAMETERS ON A COMMON AXIS ⌖ .010 CIRCULAR UNLESS OTHERWISE NOTED.
3. UNLESS OTHERWISE NOTED, TOLERANCES ARE CIRCULAR UNLESS OTHERWISE NOTED.
4. CLEANLINESS PER ATC-STD-4900, LEVEL 700 INTERNAL CHANNEL SURFACES, LEVEL VC EXTERNAL SURFACES, SSA IS 1.0 AA FT.
5. (5) RANK PER AZ478-78 WITH 1198789, APPLICABLE RANK NO. AND AEROJET TECHNOSYSTEMS CO. ASSIGNED SERIAL NO.
6. (6) ELECTRON BEAM WELD PER COGNIZANT ENGINEER.
7. PENETRANT INSPECT MACHINED SURFACES PER ATC-STD-4942, TYPE I, METHOD A, EXCEPT ETCHING NOT REQUIRED. ACCEPTANCE CRITERIA PER ATC-STD-4906, CLASS I, UNLESS OTHERWISE NOTED.
8. (8) BLEND AS NECESSARY TO PRODUCE A SMOOTH CONTINUOUS CONTOUR BETWEEN ESTABLISHED POINTS.
9. (9) CHANNEL WALL THICKNESS, CHANNEL DEPTH AND NICKEL THICKNESS ARE MEASURED NORMAL TO THE INSIDE WALL SURFACE.
10. PROTECTIVE CLOSURES ARE REQUIRED.
11. ELECTROFORMED NICKEL JACKET SHALL BE APPLIED TO AREA AND THICKNESS INDICATED. PRIOR TO APPLYING NICKEL, A THIN LAYER OF COPPER SHALL BE ELECTROFORMED TO THE LINER TO CLOSEOUT THE CHANNELS.
12. (12) MATCH MACHINE INDICATED DIAMETER OF MANIFOLD RING (2) TO MATING DIAMETER OF CHAMBER LINER (1) TO PROVIDE .020 TO .029 INCHES DIAMETRICAL CLEARANCE.
13. (13) MATCH MACHINE INDICATED HEIGHT OF MANIFOLD RING (2) TO MATING HEIGHT OF CHAMBER LINER (1) TO PROVIDE .005 TO .010 INCHES CLEARANCE FIT AT INDICATED SURFACE.
14. (14) MATCH MACHINE INDICATED DIAMETER OF MANIFOLD RING (2) TO MATING DIAMETER OF CHAMBER LINER (1) TO PROVIDE .005 TO .010 INCHES CLEARANCE FIT.
15. (15) MATCH MACHINE INDICATED DIAMETER OF MANIFOLD RING (2) TO MATING DIAMETER OF CHAMBER LINER (1) TO WITHIN .010 INCHES.
16. (16) DRY NITROGEN OR VACUUM SPACE PER COGNIZANT ENGINEER, USING (13).
17. PRIOR TO WELDING, CLEAN PER COGNIZANT ENGINEER.
18. (18) VISUALLY INSPECT ELECTRON BEAM WELDS FOR SURFACE DISCONTINUITIES USING 15 POWER MAGNIFICATION.
19. (19) FUSION WELD PER COGNIZANT ENGINEER.
20. (20) PENETRANT INSPECT FUSION WELDS PER ATC-STD-4942, TYPE II, METHOD A. ACCEPTANCE CRITERIA PER ATC-STD-4905, CLASS I.
21. (21) RADIOGRAPHICALLY INSPECT WELDS PER ATC-STD-4945. ACCEPTANCE CRITERIA PER ATC-STD-4897-1.
22. (22) AFTER ELECTRON BEAM WELDING, MACHINE INDICATED SURFACE TO PROVIDE REQUIRED OVERALL CHAMBER LENGTH OF 12.749 INCHES.
23. (23) PRIOR TO BRAZING, ALTER THERMOCOUPLE (7) PER COGNIZANT ENGINEER.
24. (24) ELECTROFORMED NICKEL THICKNESS AND TOLERANCE IS AS INDICATED, EXCEPT IN CYLINDRICAL REGION OF CHAMBER WHERE THE SPECIFIED OUTER DIAMETER CONTROLS THE THICKNESS OF THE NICKEL.
25. PERFORM PROOF TEST ON FINAL CHAMBER ASSEMBLY AS FOLLOWS:
    A. CHAMBER PROOF TEST - USING CLEAN DRY GN_2, PRESSURIZE THE COOLANT CIRCUIT TO 250 ± 25 PSIG FOR 5.5 ± 0.5 MINUTES. THERE SHALL BE NO EVIDENCE OF PERMANENT DEFORMATION OR FAILURE OF THE INTERNAL CHAMBER WALL ALONG ANY CHANNEL.
    B. CHAMBER PROOF TEST - USING CLEAN DRY GN_2, PRESSURIZE THE COOLANT CIRCUIT TO 250 ± 25 PSIG AND PRESSURIZE THE CHAMBER INTERIOR TO 150 ± 25 PSIG FOR 5.5 ± 0.5 MINUTES. THERE SHALL BE NO EVIDENCE OF PERMANENT DEFORMATION OR FAILURE OF THE ELECTROFORMED NICKEL CLOSEOUT.
26. PERFORM LEAK TEST ON FINAL CHAMBER ASSEMBLY BY PRESSURIZING THE COOLANT CIRCUIT WITH CLEAN DRY GN_2 TO 125 ± 25 PSIG FOR 5.5 ± 0.5 MINUTES PER ATC-17063, METHOD II. NO EXTERNAL LEAKAGE ALLOWED.
27. WITH FINAL CHAMBER ASSEMBLY, LESS PROTECTIVE CLOSURES, AND RECORD WEIGHT TO THE NEAREST 0.01 POUNDS.
28. (28) ACCEPTABLE ALTERNATE MATERIAL IS LOW-CARBON NICKEL UNS NO. 02201 PER ASTM B-160 OR B-162.
29. (29) CHAMBER LINER MATERIAL IS ANZIAC ZIRCONIUM COPPER ALLOY (CDA 150) OF THE FOLLOWING COMPOSITION: 99.9% OFHC COPPER (INCLUDING SILVER AND 0.0015 MAXIMUM OXYGEN) AND .10-.20% ZIRCONIA. FORGING REQUIREMENTS: HOT, UPSET AND CROSS GRAIN FORGED WITH DIAMETRAL SECTIONS TO BE TAKEN FOR UNIFORMITY OF MICROSTRUCTURE, GRAIN SIZE, COMPOSITION AND FREEDOM FROM CENTER DEFECTS (BURSTS, CRACKS, POROSITY, PIPING).
30. (30) USE (13) AS FILLER MATERIAL BETWEEN CHAMBER LINER (1) AND MANIFOLD RING (2) PRIOR TO EB WELDING.

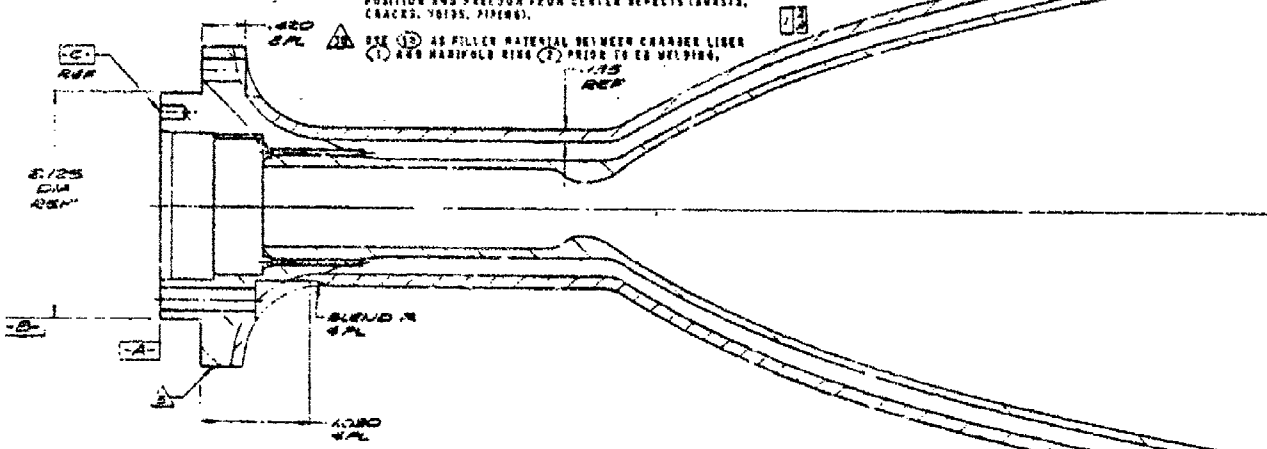

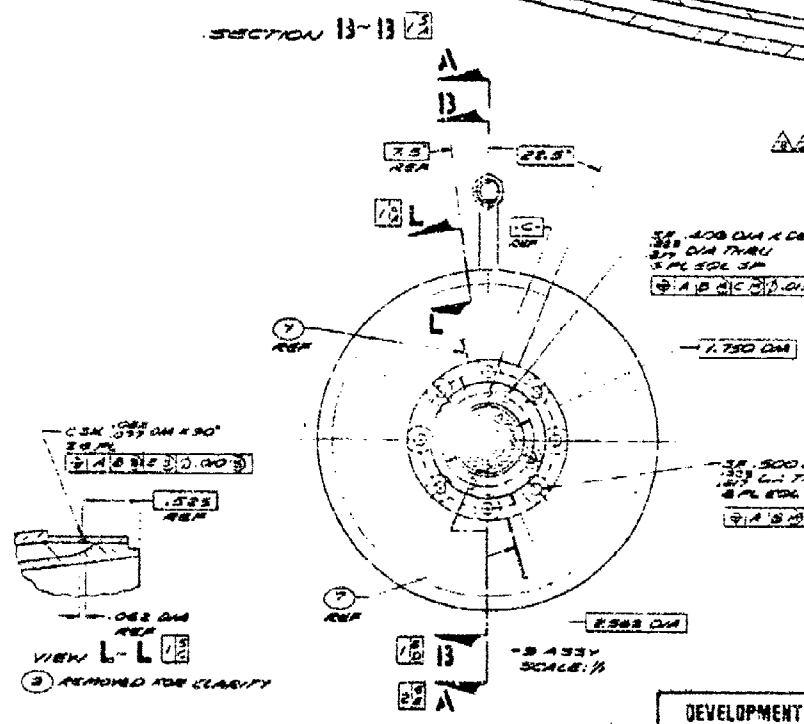

DEVELOPMENT
FOR TEST OR EXPE

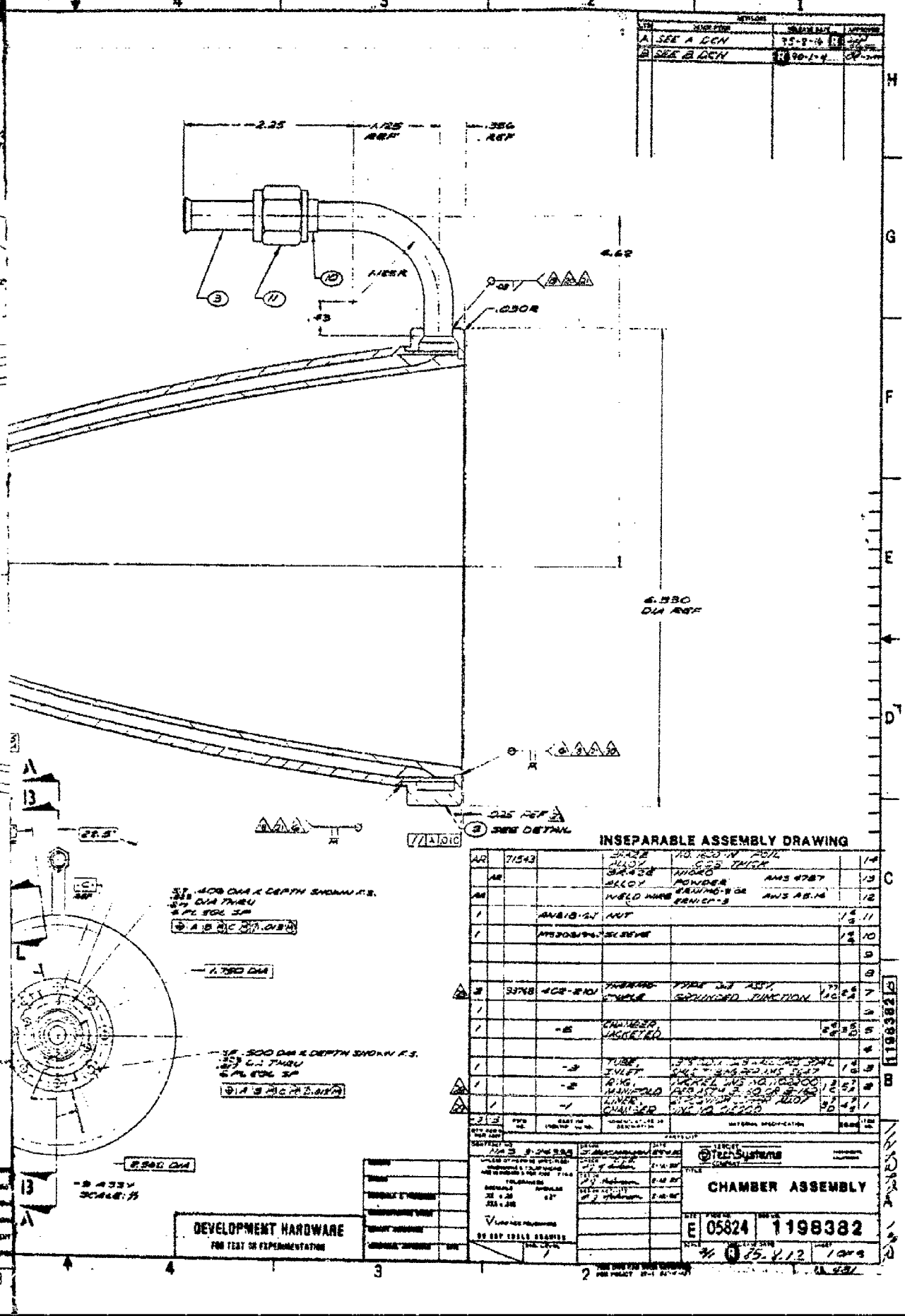
INSEPARABLE ASSEMBLY DRAWING
CHAMBER ASSEMBLY
TechSystems
DEVELOPMENT HARDWARE
FOR TEST OR EXPERIMENTATION
E 05824 1198382
SEE A DCN
SEE B DCN
2.25
4.62
6.550 DIA REF
.025 REF
SEE DETAIL
.1.500 DIA
.8.340 DIA
SCALE: 1/2

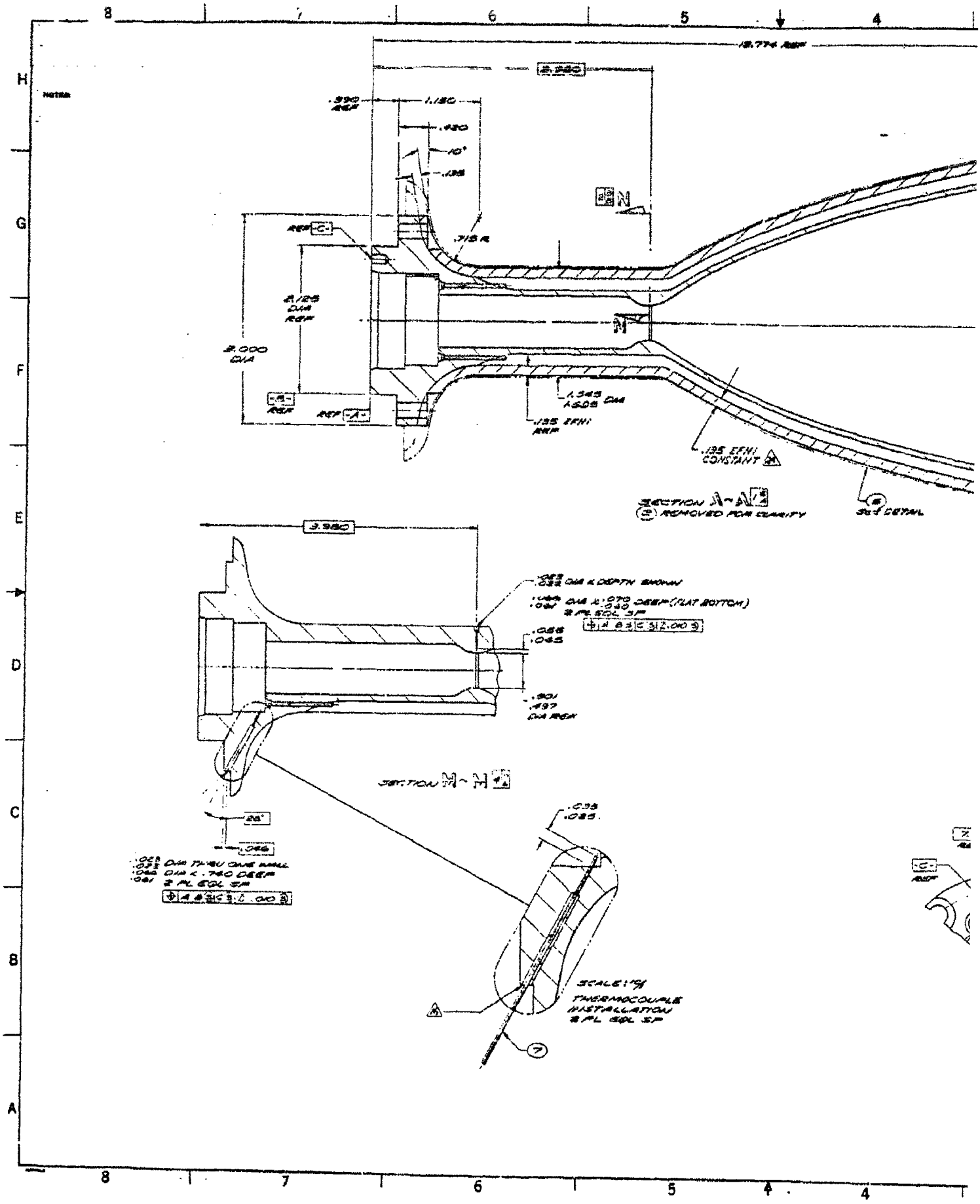
13.774 REF
2.280
.590 REF
1.180
.430
10°
.135
.715 R
REF -C-
2.125 DIA REF
2.000 DIA
REF -B-
REF -A-
1.545 1.505 DIA
.135 EFNI REF
.135 EFNI CONSTANT
SECTION A-A
REMOVED FOR CLARITY
SEE DETAIL
3.980
.063 .032 DIA X DEPTH SHOWN
.086 .061 DIA X .070 DEEP (FLAT BOTTOM)
2 PL EQL SP
.066 .045
.901 .897 DIA REF
SECTION M-M
28°
.046
.063 .032 DIA THRU ONE WALL
.066 .061 DIA X .740 DEEP
2 PL EQL SP
.035 .025
SCALE: 1/1
THERMOCOUPLE INSTALLATION
2 PL EQL SP
-C- REF

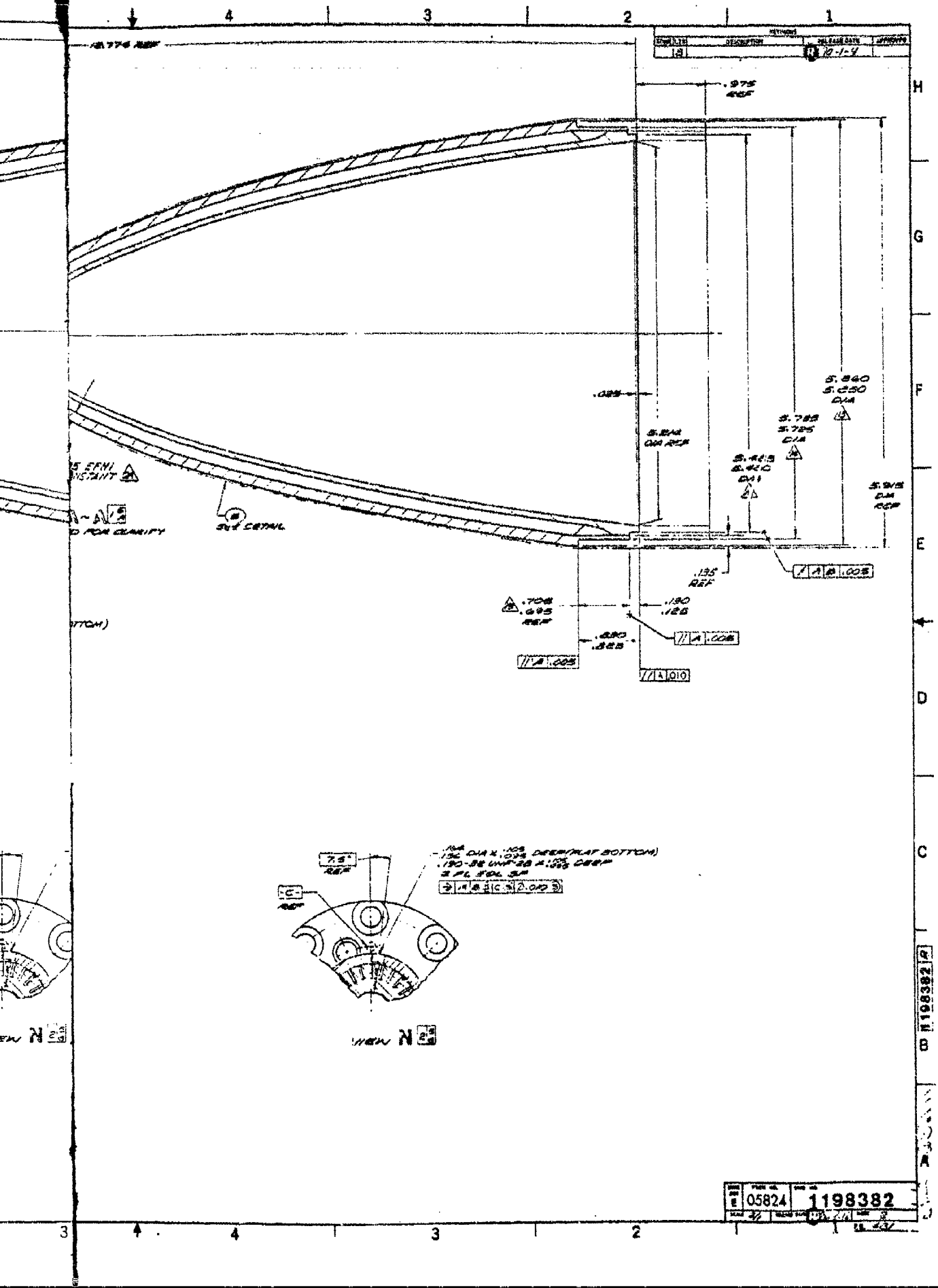
.975 REF
.025
5.840 5.850 DIA
5.785 5.795 DIA
5.415 5.410 DIA
5.915 DIA REF
.135 REF
.190 .120
.680 .625
.005
.010
7.5° REF
C REF
VIEW N

NOTES

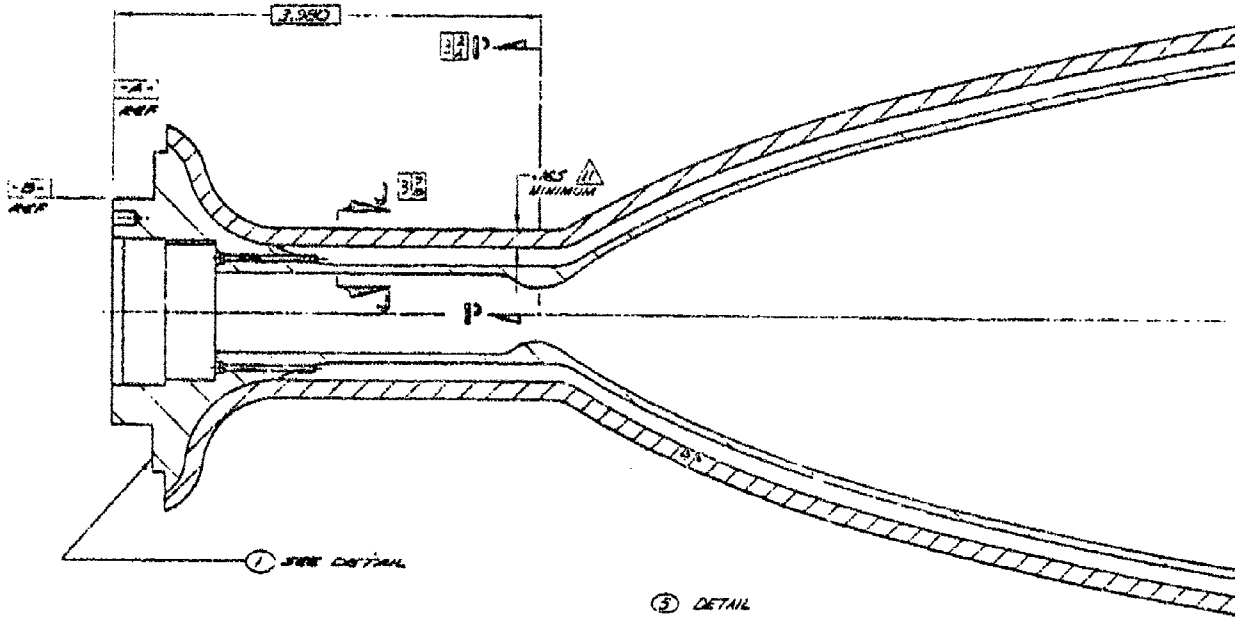

DETAIL

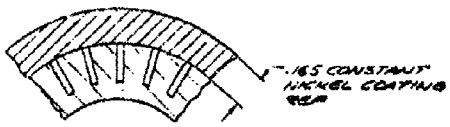

VIEW J-J
SCALE 1 4/1

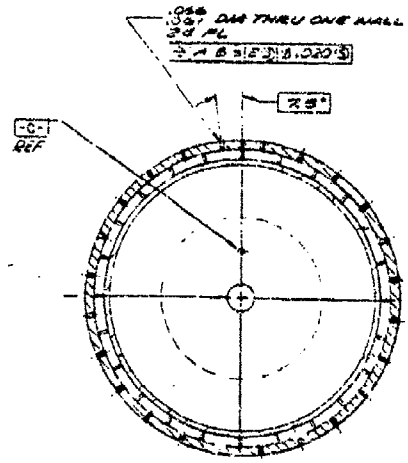

SECTION K-X
SCALE 1 1/1

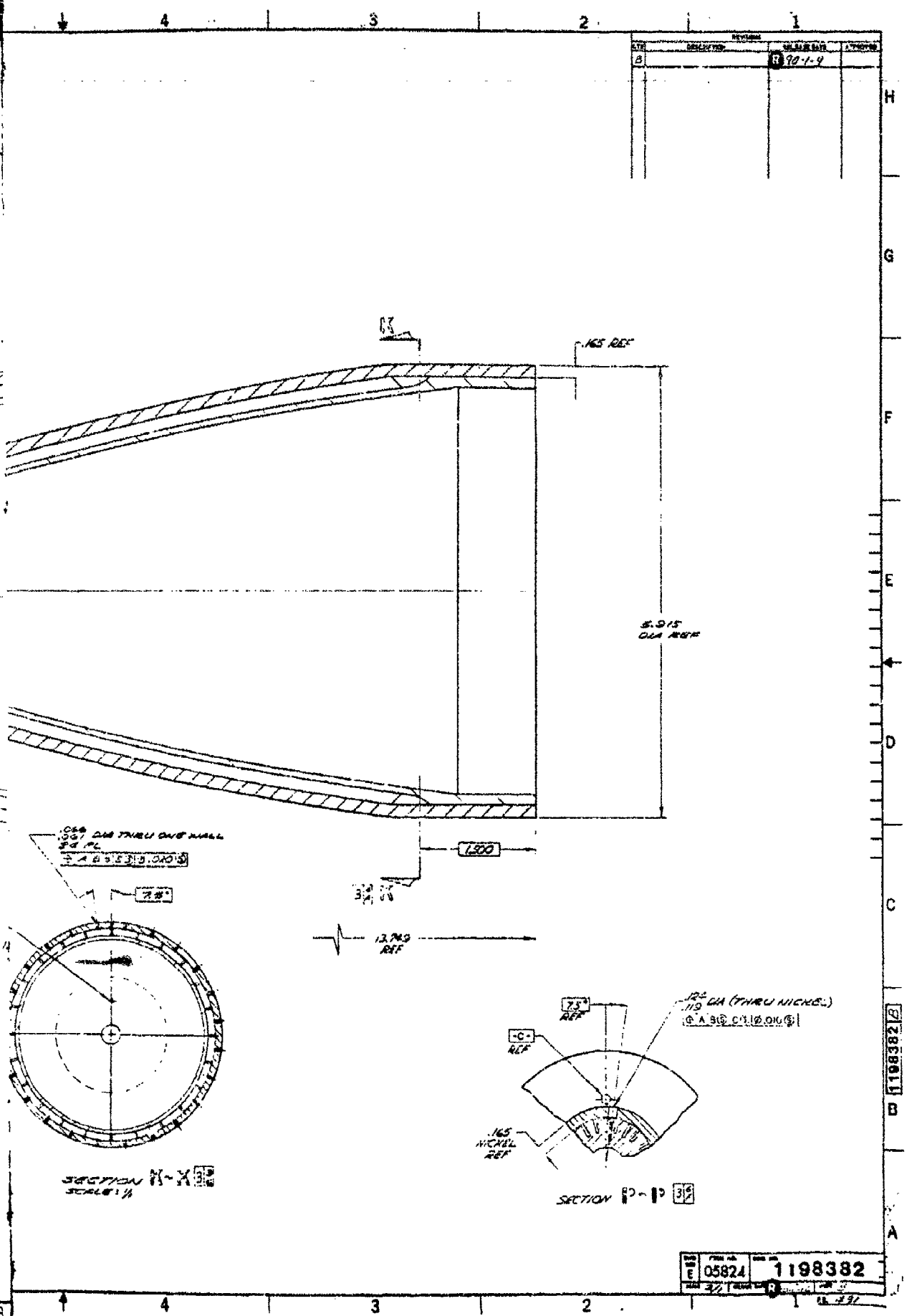
REVISIONS
B
90-1-9
.165 REF
5.915 DIA REF
.064 .061 DIA THRU ONE WALL
1.500
13.749 REF
SECTION M-M
SCALE: 1/1
.122 .119 DIA (THRU NICKEL)
7.5° REF
-C- REF
.165 NICKEL REF
SECTION P-P
1198382
05824
1198382

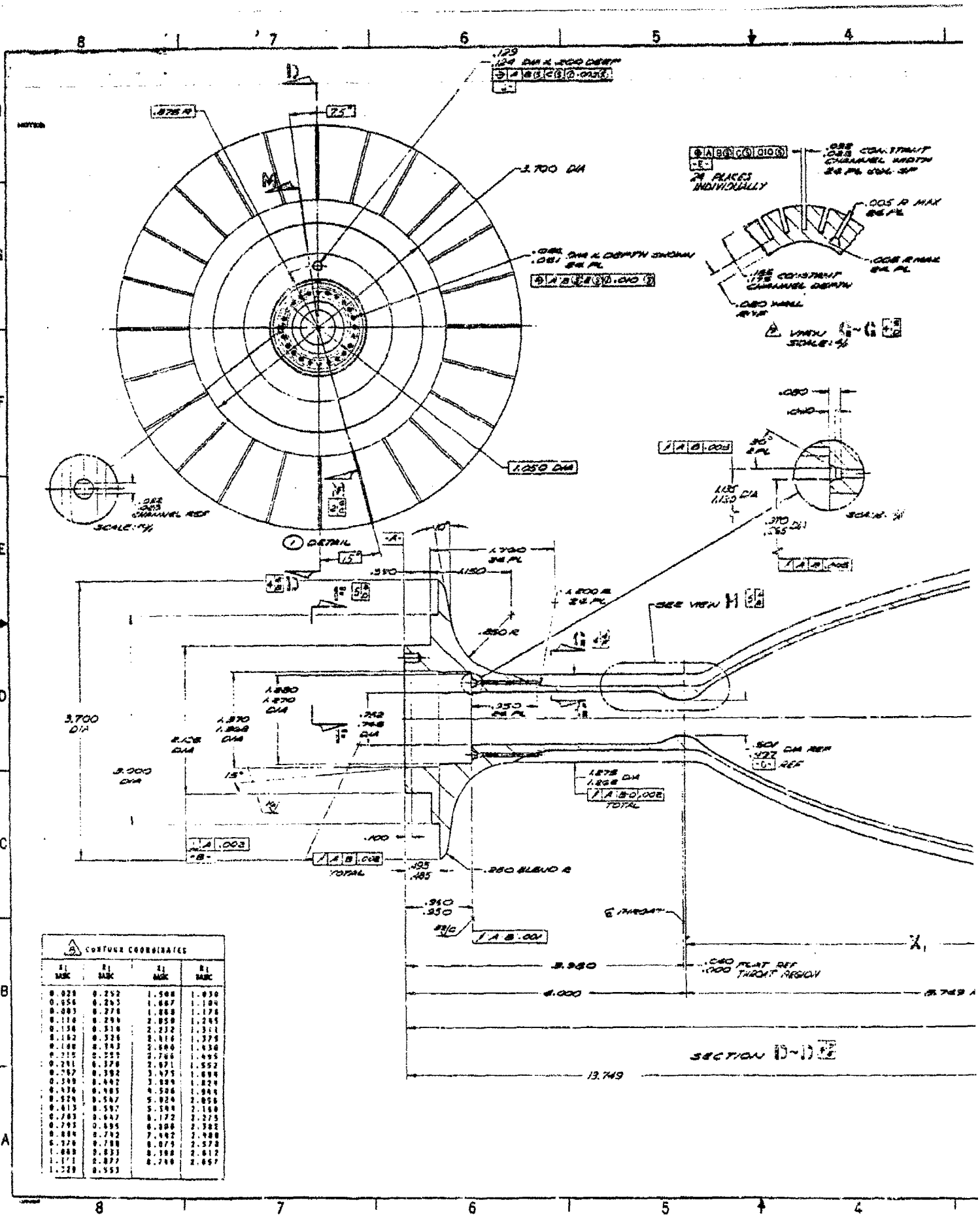
3.700 DIA
1.050 DIA
24 PLACES INDIVIDUALLY
.005 R MAX
.080 HALL RVS
VIEW G-G
SCALE: 4/1
SCALE: 1/1
DETAIL
SEE VIEW H
.850 R
3.700 DIA
3.000 DIA
.260 BLEND R
TOTAL
.501 DIA REF
.922 REF
.040 FLAT REF
.100 THROAT REGION
SECTION D-D
13.749
CONTOUR COORDINATES

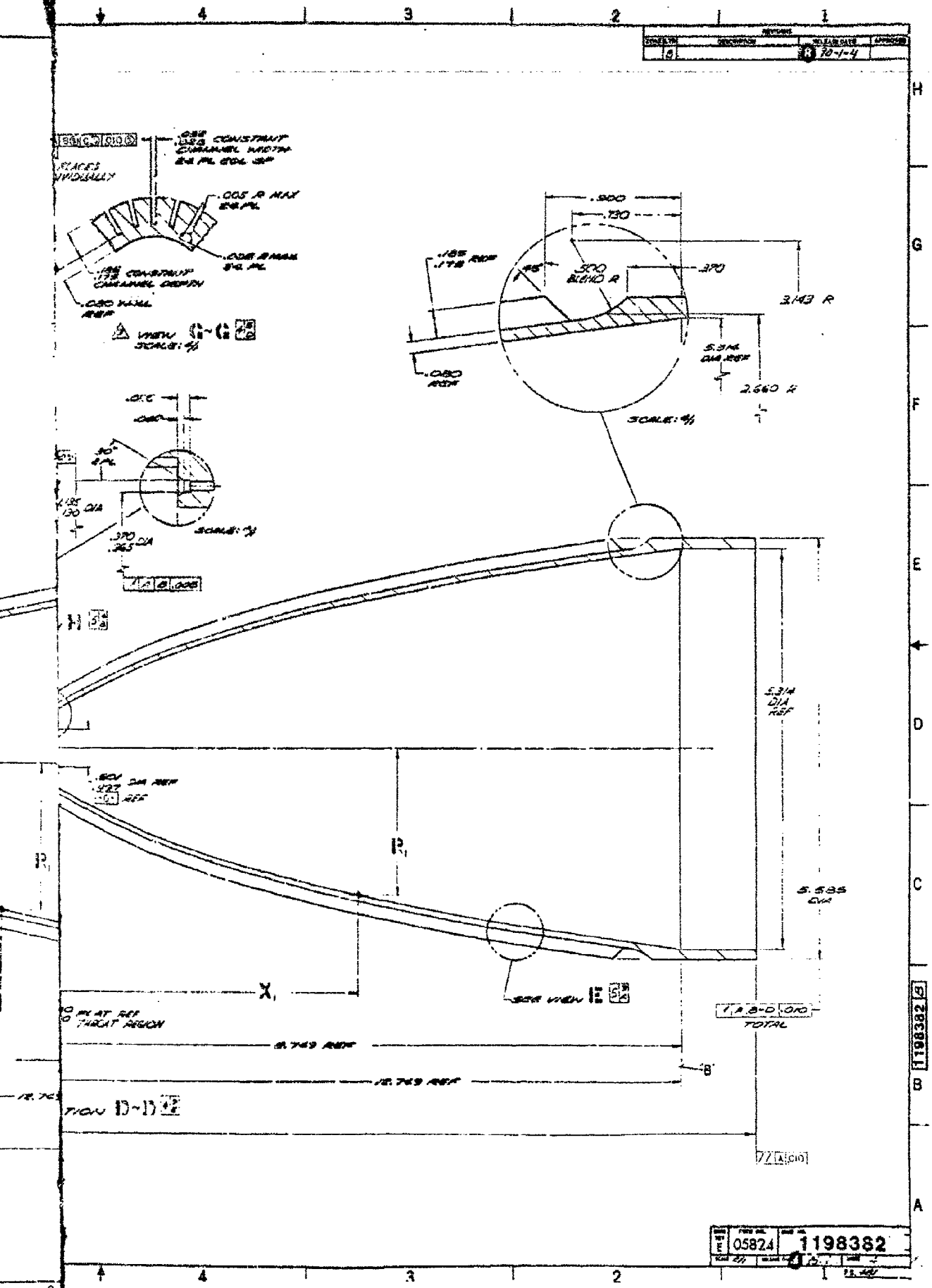
.900
.730
.185
.178 REF
.500
BLEND R
.370
3.143 R
5.314
DIA REF
2.660 R
.080
REF
SCALE: 4/1
.370
.365 DIA
5.314
DIA
REF
5.585
DIA
R_1
X_1
SEE VIEW E
TOTAL
1198382
05824
1198382

NOTES

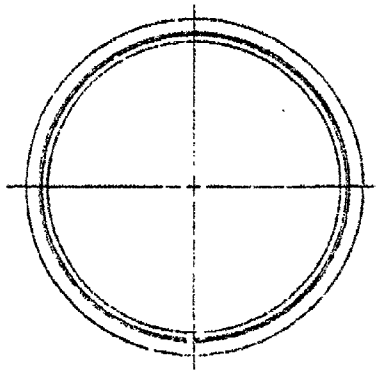

DETAIL
SCALE: 1/4

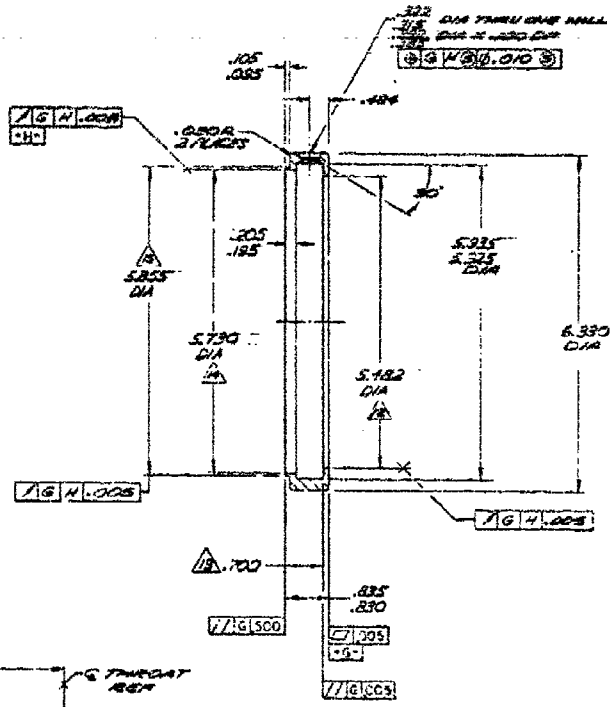

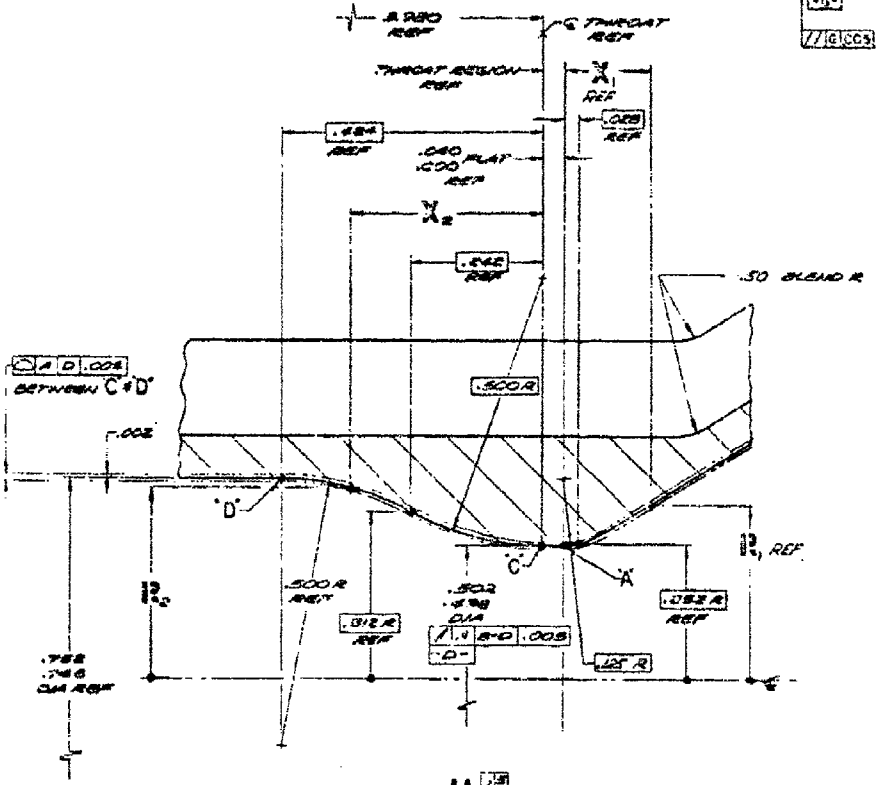

VIEW H
SCALE: 1/4

CONTOUR COORDINATES	
X_2 BASIC	R_2 BASIC
.242	.312
.248	.316
.257	.320
.265	.324
.273	.328
.281	.332
.289	.335
.297	.339
.305	.342
.313	.345
.321	.348
.333	.350
.338	.353
.340	.356
.355	.358
.365	.360
.372	.362
.380	.364
.389	.366
.397	.367
.406	.369
.415	.370
.423	.371
.432	.372
.440	.373
.449	.374
.458	.374
.467	.375
.475	.375
.484	.375

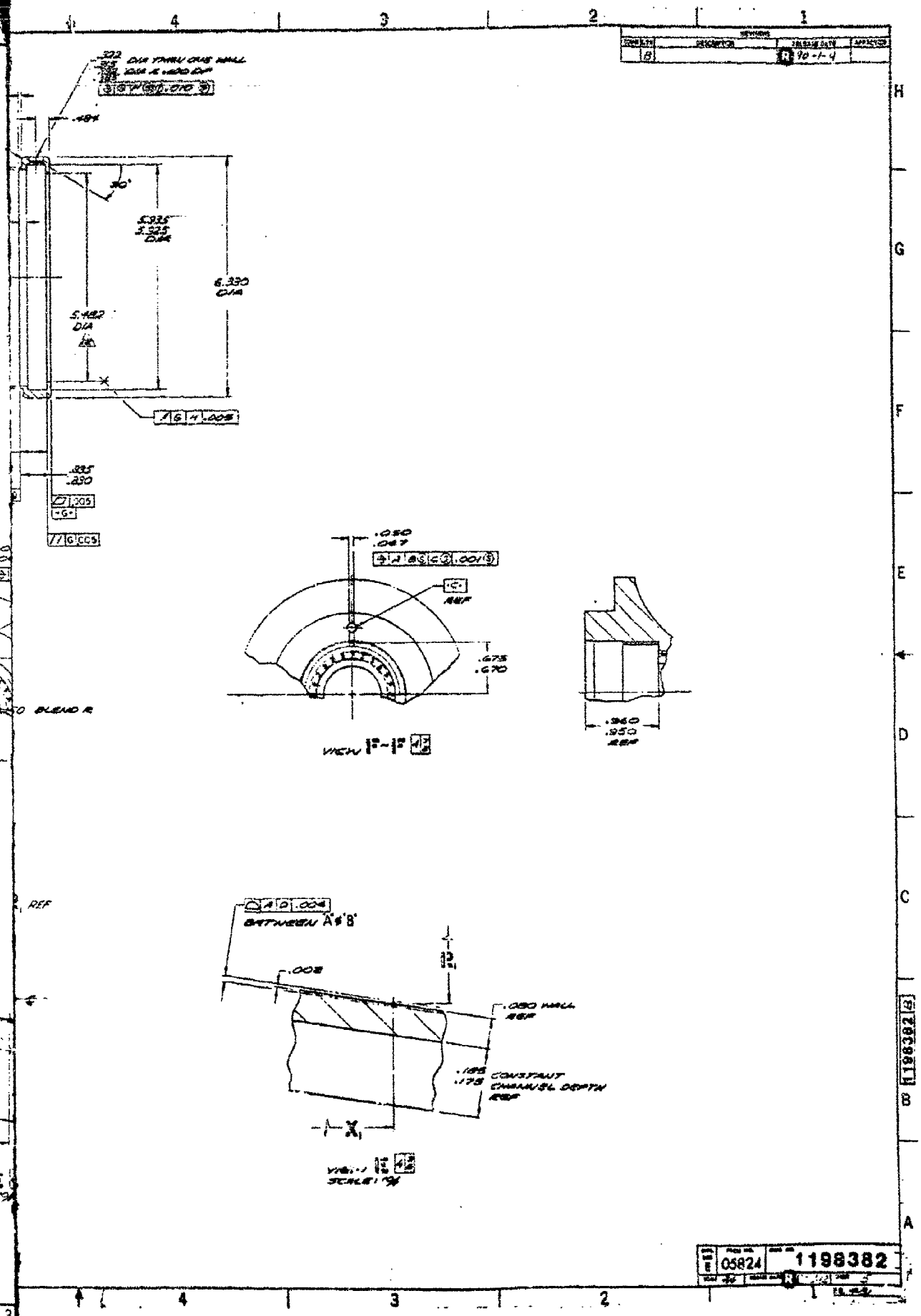
.494
30°
5.935
5.925
DIA
6.330
DIA
5.482
DIA
.005
.835
.830
.005
.050
.047
.675
.670
REF
.960
.950
REF
BLEND R
REF
.004
BETWEEN A & B
.008
.050 WALL
REF
.185
.175
CONSTANT
CHANNEL DEPTH
REF
1198382
05824
1198382

NOTES

1. INTERPRET DRAWING PER AFC-STD-4976.
2. ALL DIAMETERS [⌖ A S .010] CIRCULAR, UNLESS OTHERWISE NOTED.
3. MARK PER AS478-7 WITH INFORMATION SHOWN BEAS INLET PORT AND REAR CHAMBER PRESSURE PORT, AS SHOWN.
4. MARK PER AS478-37 WITH ITEMS83 ARE APPLICABLE BASH SURFACE.

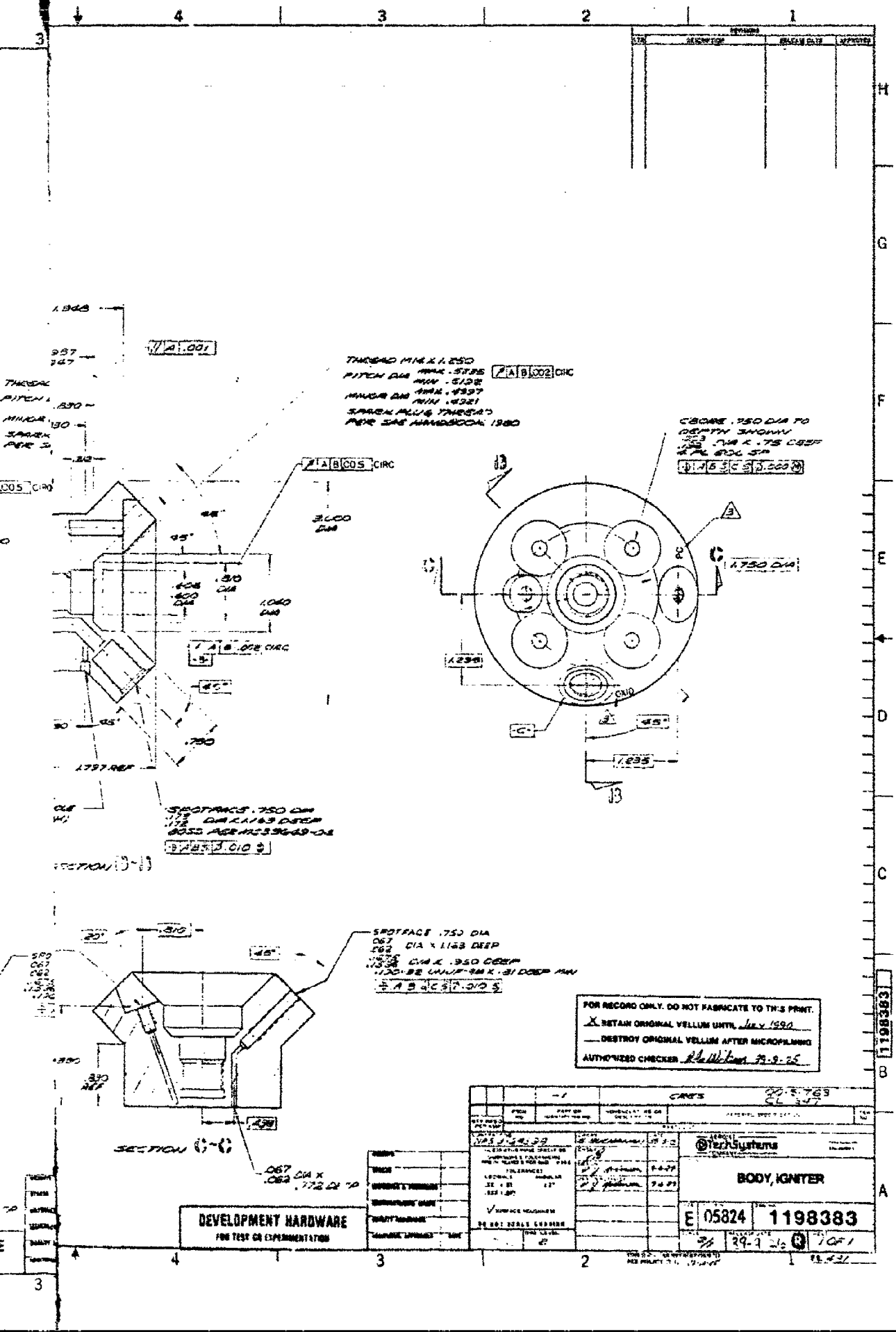
THREAD M14 X 1.250
PITCH DIA MAX .5135
MIN .5128
MAJOR DIA MAX .4937
MIN .4921
SPARK PLUG THREAD
PER SAE HANDBOOK 1980
COUNTERBORE .750 DIA TO
DEPTH SHOWN
SPOTFACE .750 DIA
SPOTFACE .750 DIA
SECTION C-C
SECTION D-D
FOR RECORD ONLY. DO NOT FABRICATE TO THIS PRINT.
X RETAIN ORIGINAL VELLUM UNTIL July 1990
DESTROY ORIGINAL VELLUM AFTER MICROFILMING
AUTHORIZED CHECKER
TechSystems
BODY, IGNITER
E 05824 1198383
DEVELOPMENT HARDWARE
FOR TEST OR EXPERIMENTATION

NOTES:

1. INTERPRET DRAWING PER ATC-STD-N926.
2. MATCH MACHINE DIAMETER TO MATING DIAMETER WITHIN .001 TO .002 DIAMETRICAL CLEARANCE FIT.
3. DRY HYDROGEN OR VACUUM BRAZE PER COGNIZANT ENGINEER USING (4), PRIOR TO FINAL MACHINING.
4. MARK PER AS476-37 WITH L198384, APPLICABLE DASH NO. AND AEROJET TECHSYSTEMS CO. ASSIGNED SERIAL NO.

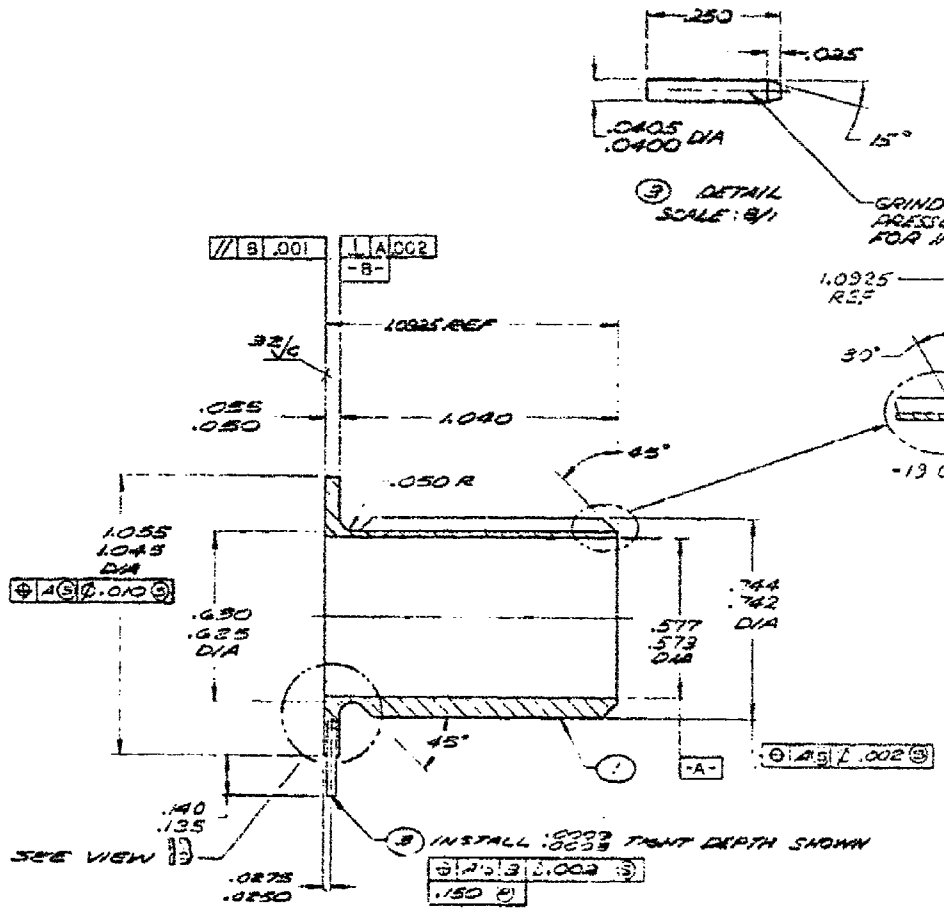

FOR RECORD ONLY. DO NOT FABRICATE TO THIS PRINT.
X RETAIN ORIGINAL VELLUM UNTIL APRIL 1990
___ DESTROY ORIGINAL VELLUM AFTER MICROFILMING
AUTHORIZED CHECKER R.G. Whitten 09-9-85

DEVELOPMENT HARDWARE
FOR TEST OR EXPERIMENTATION

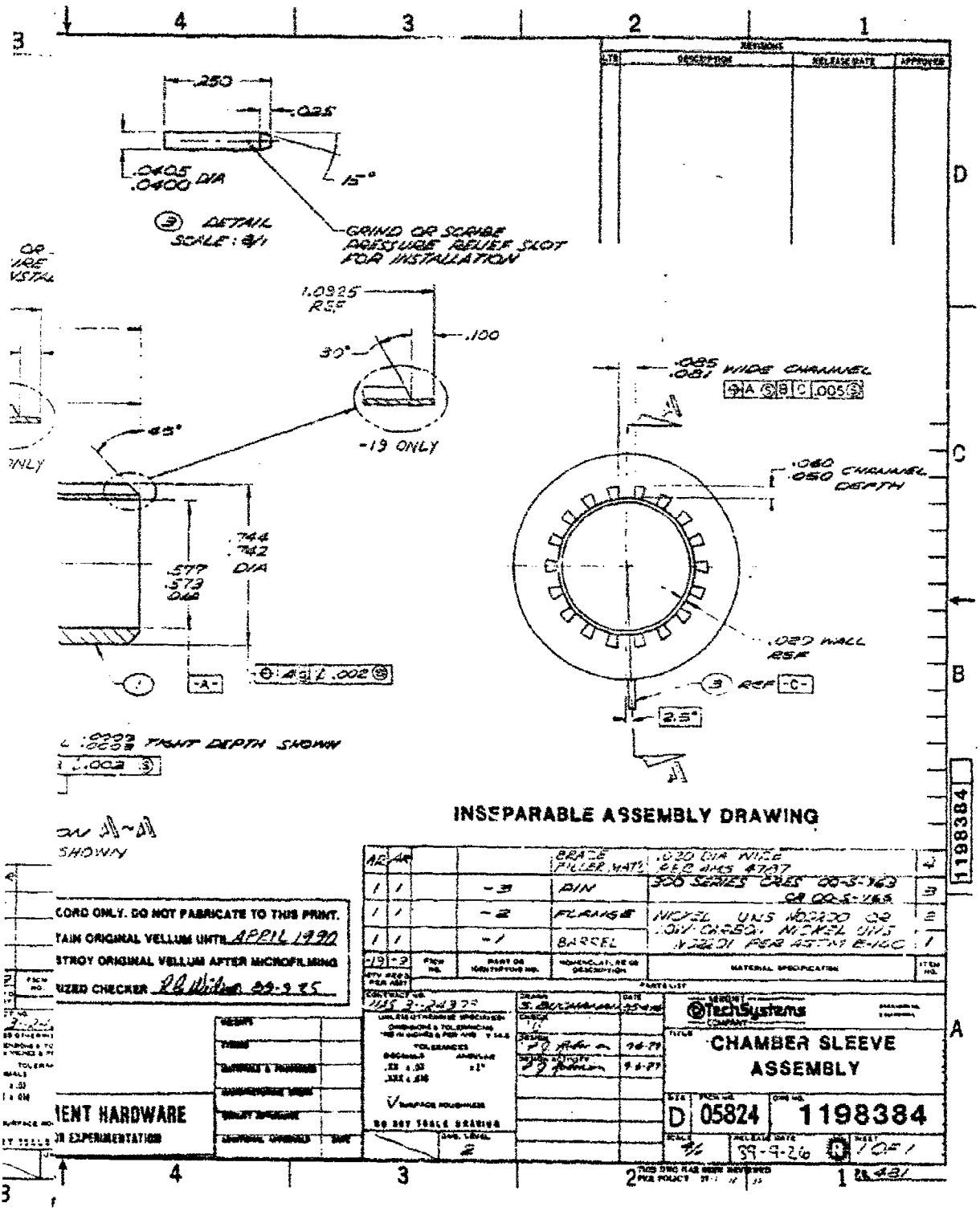
.250
.025
.0405
.0400 DIA
15°
DETAIL
SCALE: 4/1
GRIND OR SCRIBE PRESSURE RELIEF SLOT FOR INSTALLATION
1.0925 REF
.100
30°
-19 ONLY
45°
.744
.742
DIA
.577
.573
DIA
.085
.081 WIDE CHANNEL
.005
.060
.050 CHANNEL DEPTH
.020 WALL REF
REF
2.5°
.0233
.0228 FIGHT DEPTH SHOWN
.002
INSEPARABLE ASSEMBLY DRAWING
BRAZE FILLER MATL
.020 DIA WIRE REQ AMS 4787
300 SERIES CRES QQ-S-763 OR QQ-S-766
NICKEL UNS N02200 OR LOW CARBON NICKEL UNS N22201 PER ASTM B-160
BARREL
MATERIAL SPECIFICATION
PART LIST
CONTRACT NO. NAS 3-24372
TechSystems COMPANY
CHAMBER SLEEVE ASSEMBLY
D
05824
1198384
1/2
89-9-26
1 OF 1
DO NOT SCALE DRAWING
CORD ONLY. DO NOT FABRICATE TO THIS PRINT.
TAIN ORIGINAL VELLUM UNTIL APRIL 1990
STROY ORIGINAL VELLUM AFTER MICROFILMING
IZED CHECKER
IENT HARDWARE
R EXPERIMENTATION
1198384

NOTES:

1. INTERPRET DRAWING PER ATC-STD-1026.
2. DRY HYDROGEN OR VACUUM BRAZE PER CONSIGNANT ENGINEER, USING (14).
3. ALL DIAMETERS [A B .01] CIRCULAR, UNLESS OTHERWISE NOTED.
4. CLEANLINESS PER ATC-STD-1008, LEVEL 200. SSA IS 1.0 SQ. FT.
5. MARK PER ASM70-7 WITH (198305, APPLICABLE DASH NO. AND AEROJET TECHSYSTEMS CO. ASSIGNED SERIAL NO.
6. ALL DIMENSIONS APPLY AFTER BRAZING, UNLESS OTHERWISE INDICATED.
7. ITEM (21) IS USED FOR STACKING, ALIGNING AND BRAZING PLATELETS ONLY. REMOVE (21) AFTER BRAZING AND PRIOR TO FINAL MACHINING.
8. ANTEN AS SHOWN.
9. NICKEL SPRIZE PLATELETS USING (15) STACK PLATELETS PER STACKING SEQUENCE (VIEW A) AND BOND STACK ASSY PER CONSIGNANT ENGINEER.
10. MIX PARTS "A" AND "B" OF (13) PER MANUFACTURER'S INSTRUCTIONS TO OBTAIN PROPER ELECTROLESS NICKEL SOLUTION. MANUFACTURER IS ANDREY INC. 2230-7 GLADWICK, COMPTON, CA. 90220.
11. DRY HYDROGEN OR VACUUM BRAZE BONDED PLATELET STACK ASSY TO IGNITER BODY (1) USING (14) PER CONSIGNANT ENGINEER.

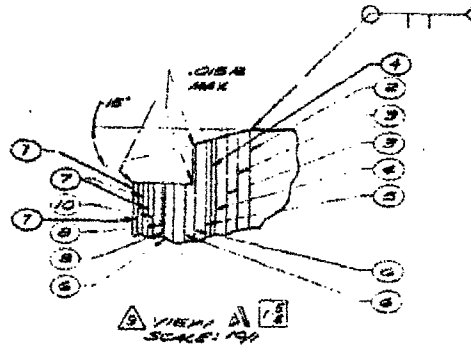

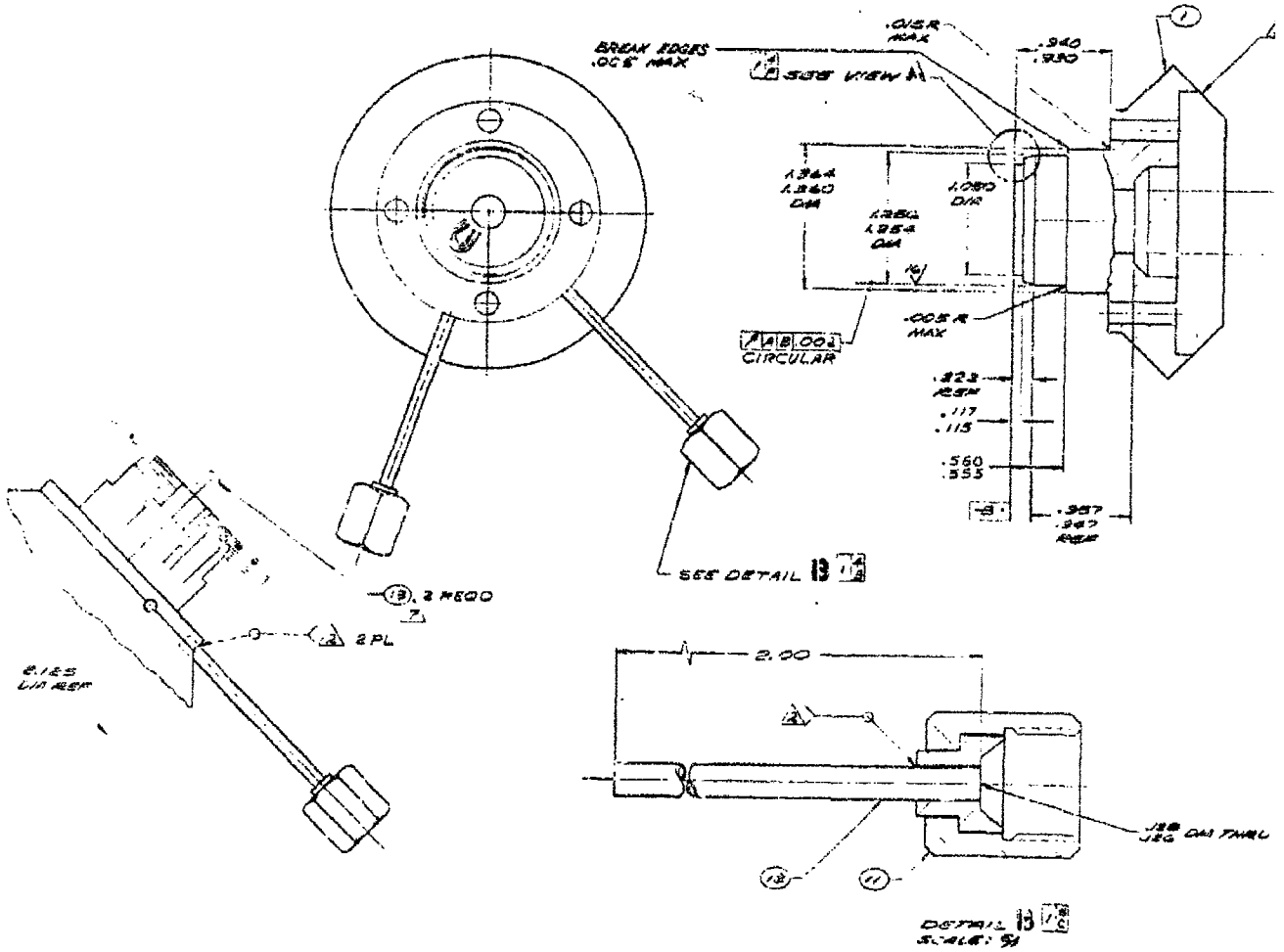

DEVELOPMENT
FOR TEST ON LY

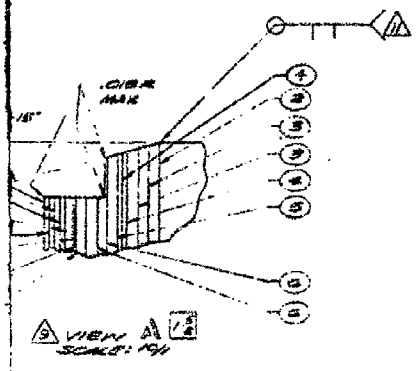

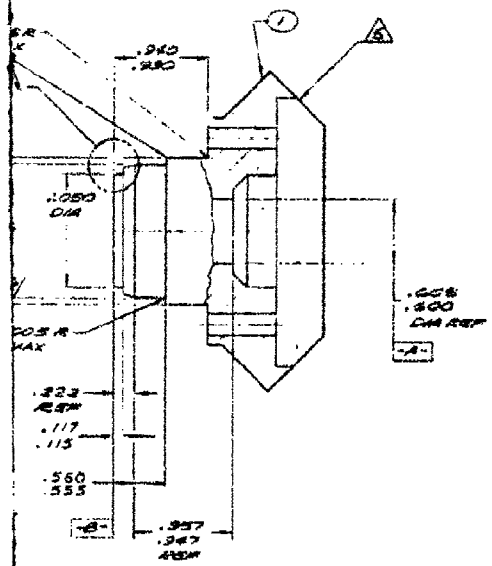

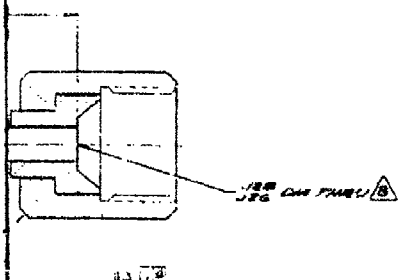

FOR RECORD ONLY. DO NOT FABRICATE TO THIS PRINT.
X RETAIN ORIGINAL VELLUM UNTIL APRIL 1990
___ DESTROY ORIGINAL VELLUM AFTER MICROFILMING
AUTHORIZED CHECKER [illegible] 89-9-25

INSEPARABLE ASSEMBLY DRAWING

	AR		BRASS ALLOY	ANCHOR LOCK
	AR		BRAZE ALLOY	ELECTROLESS NICKEL FOIL .001 THICK PER AMS 4777
	2	MS9390-300	PIN	
	2	-11	TUBE	.125 OD x .020 WALL CRES 347 AMS 5556 TYPE X
	2	-10	CAP	[illegible]
	1	1198833-8	PLATELET FUEL DISCH	
	2	1198833-7	PLATELET	
	4	-6	PLATELET	
	3	-5	PLATELET	
	1	-4	PLATELET	
	2	-3	PLATELET	
	2	-2	PLATELET	
	1	1198833-1	PLATELET BOTTOM	
	1	1198833-1	BODY - IGNITER	

MATERIAL SPECIFICATION

DEVELOPMENT HARDWARE
FOR TEST OR EXPERIMENTATION

DO NOT SCALE DRAWING

Tech Systems Company

IGNITER BODY AND PLATELET ASSEMBLY

E 05824 1198385

SCALE 5/1 89-9-26 1 OF 1

1198385

NOTES:

1. INTERPRET DRAWING PER ATC-STD-0026.
2. MARK PER A5478-17 WITH L19858 AND APPLICABLE NASA SURVEY.
3. MARK PER A5478-7 WITH INFORMATION SHOWN NEAR INLET PORT AND NEAR CHAMBER PRESSURE PORT, AS SHOWN.
4. ALL ANGULAR TOLERANCES ARE CIRCULAR, UNLESS OTHERWISE NOTED.
5. ALL DIAMETERS ⌖ A B .010 CIRCULAR, UNLESS OTHERWISE NOTED.

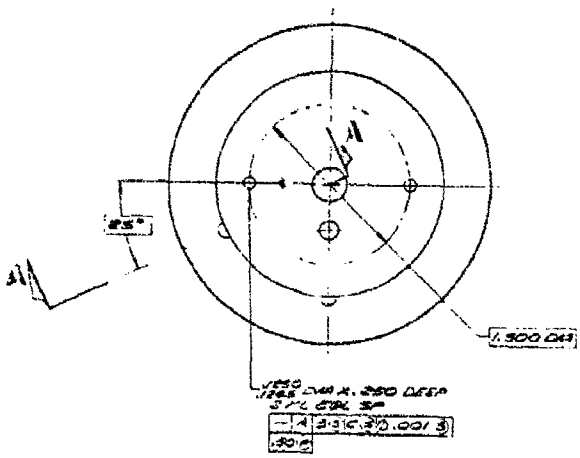

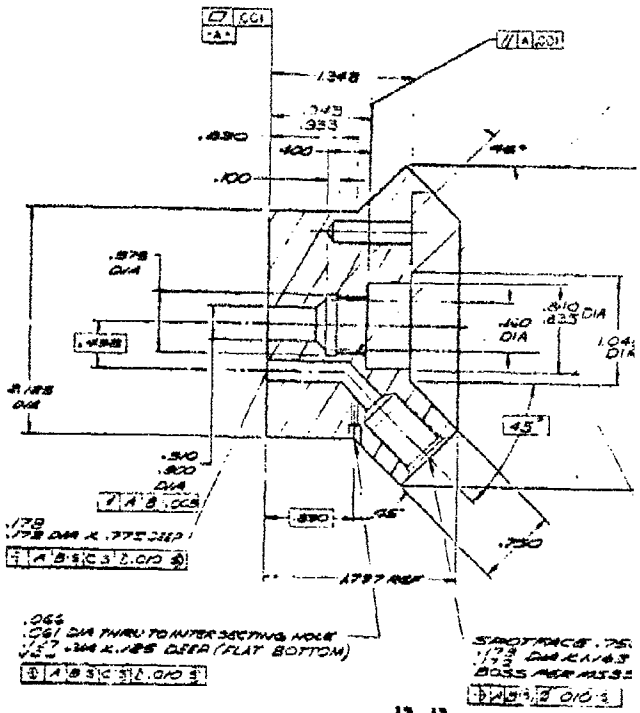

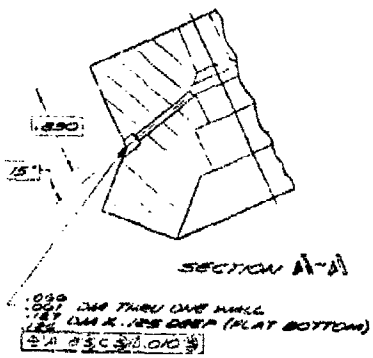

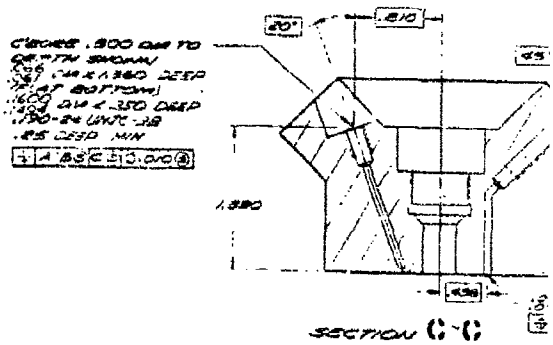

DEVELOPMENT

FOR TEST OR EXP

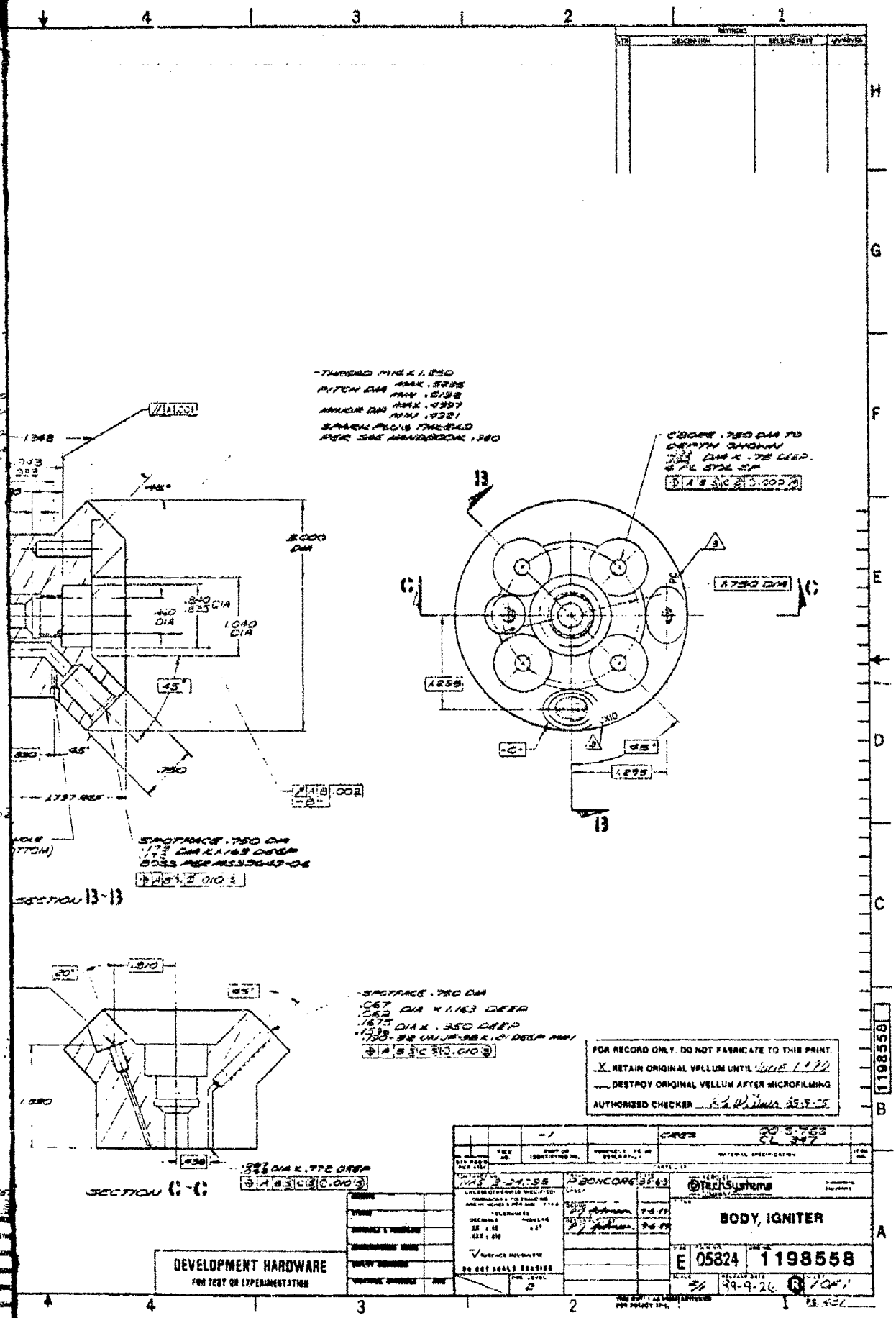
SECTION B-B
SECTION C-C
FOR RECORD ONLY. DO NOT FABRICATE TO THIS PRINT.
RETAIN ORIGINAL VELLUM UNTIL
DESTROY ORIGINAL VELLUM AFTER MICROFILMING
AUTHORIZED CHECKER
BODY, IGNITER
DEVELOPMENT HARDWARE
FOR TEST OR EXPERIMENTATION
E 05824
1198558
DO NOT SCALE DRAWING

NOTES:

1. INTERPRET DRAWING PER ATC-STD-4020.
2. DRY HYDROGEN OR VACUUM BRAZE PER COGNIZANT ENGINEER, USING (14).
3. ALL DIAMETERS ⌖ A B .010 CIRCULAR, UNLESS OTHERWISE NOTED.
4. CLEANLINESS PER ATC-STD-4000, LEVEL 200. SSA IS 1.0 SQ. FT.
5. MARK PER ASM78 / MIL-STD-130, APPLICABLE DASH NO. AND AEROJET TECHSYSTEMS CO. ASSIGNED SERIAL NO.
6. ALL DIMENSIONS APPLY AFTER BRAZING, UNLESS OTHERWISE INDICATED.
7. ITEM (11) IS USED FOR STACKING, ALIGNING AND BRAZING PLATELETS ONLY. REMOVE (11) AFTER BRAZING AND PRIOR TO MACHINING.
8. ALTER AS SHOWN.
9. NICKEL STRIKE PLATELETS USING (15), STACK PLATELETS PER STACKING SEQUENCE (VIEW A) AND BOND STACK ASSY PER COGNIZANT ENGINEER.
10. MIX PARTS "A" AND "B" OF (15) PER MANUFACTURER'S INSTRUCTIONS TO OBTAIN PROPER ELECTROLESS NICKEL SOLUTION. MANUFACTURER IS ARGREE INC., 2230-T SLAUSON, COMPTON, CA. 90220.
11. DRY HYDROGEN OR VACUUM BRAZE BONDED PLATELET STACK ASSY TO IGNITER BODY (1) USING (16) PER COGNIZANT ENGINEER.

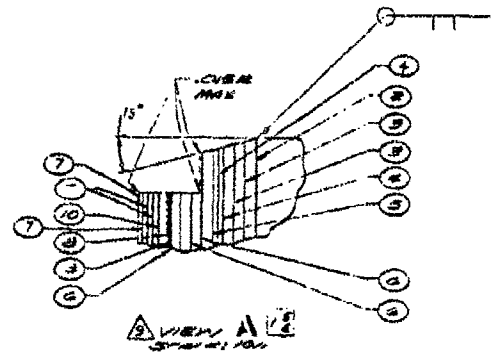

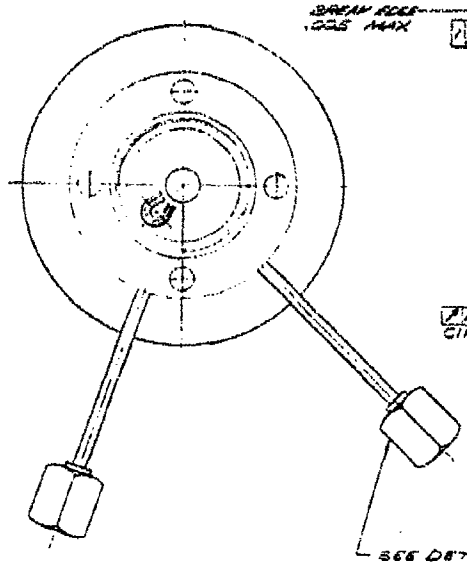

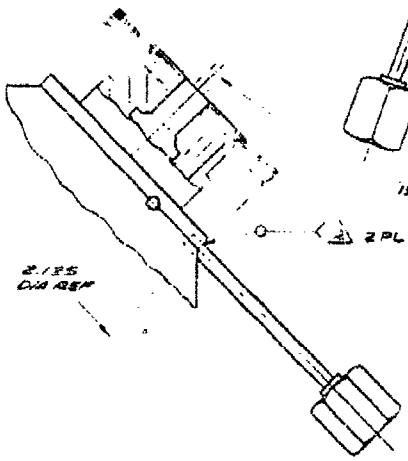

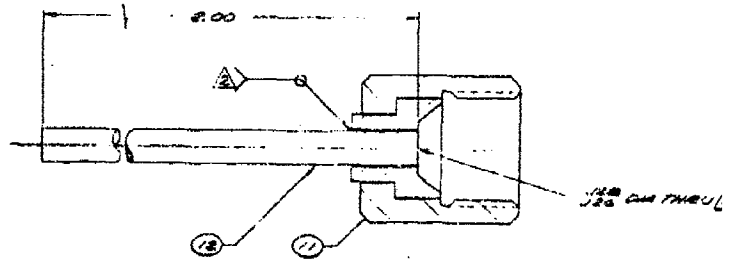

DEVELOPMENT
FOR TEST OR EXPER

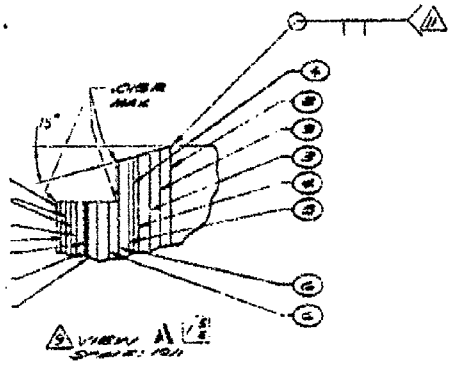

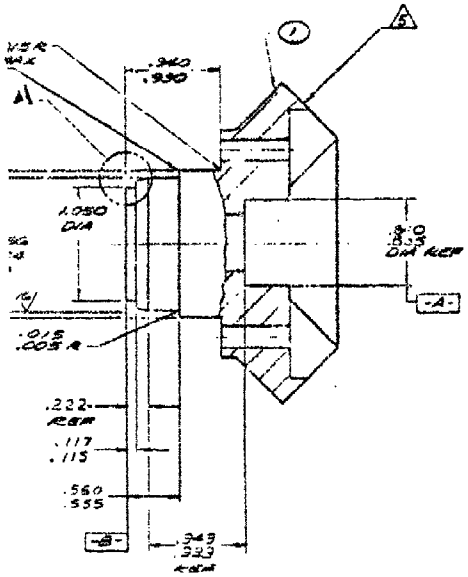

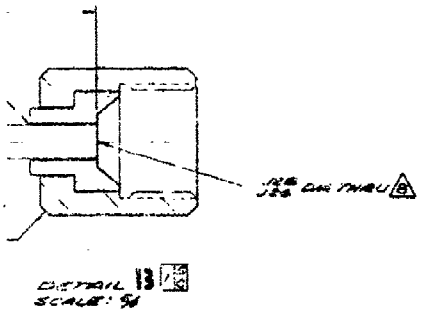

FOR RECORD ONLY. DO NOT FABRICATE TO THIS PRINT.
X RETAIN ORIGINAL VELLUM UNTIL JUNE 1990
___ DESTROY ORIGINAL VELLUM AFTER MICROFILMING
AUTHORIZED CHECKER [illegible] 89-9-26

INSEPARABLE ASSEMBLY DRAWING

	AR		BRAZE ALLOY	MONEY LABS W-34	15
	AR		BRAZE ALLOY	ELECTROLESS NICKEL .001 THICK PER AMS 4797	14
	2	MS 9350-200	PIN		13
	2	-11	TUBE	MS [illegible] AMS [illegible] TYPE A AFTER PROM & INSP-55 CODE IDENT NO 20220	12
	2	-10	CAP		11
	1	1198833-8	PLATELET		10
					9
	2	1198833-7	PLATELET		8
	4	1198833-6	PLATELET BOTTOM		7
	3	1198833-5	PLATELET		6
	1	1198833-4	PLATELET		5
	2	1198833-3	PLATELET		4
	2	1198833-2	PLATELET		3
	1	1198833-1	PLATELET BOTTOM		2
	1	1198558-1	BODY-IGNITER		1
	-2	PIECE NO.	PART OR IDENTIFYING NO.	DESCRIPTION	ITEM NO.

PARTS LIST

PROTOTYPE NO. AOM 3-94398	CODE IDENT NO. PONCORE	SIZE 8G411	©TechSystems
UNLESS OTHERWISE SPECIFIED DIMENSIONS & TOLERANCES ARE IN INCHES & MIN AND TRUE	CHECKED		
TOLERANCES DECIMALS .XX ±.01 .XXX ±.005 ANGULAR ±1°	DRAWN J. Gonzales	9-6-89	TITLE IGNITER BODY AND PLATELET ASSEMBLY
✓ SURFACE REQUIREMENTS	ENGR J. Johnson	9-6-89	
DO NOT SCALE DRAWING			SIZE E CODE IDENT NO. 05824 DWG NO. 1198559
	SCALE 2		SHEET 1 REVISION DATE 89-9-26 SHEET 1 OF 1

DEVELOPMENT HARDWARE
FOR TEST OR EXPERIMENTATION

NOTES:

1 INTERPRET DRAWING PER ATC-STD-4926.

2 MARK PER AS478-7A WITH 119867A AND APPLICABLE DASH NUMBER.

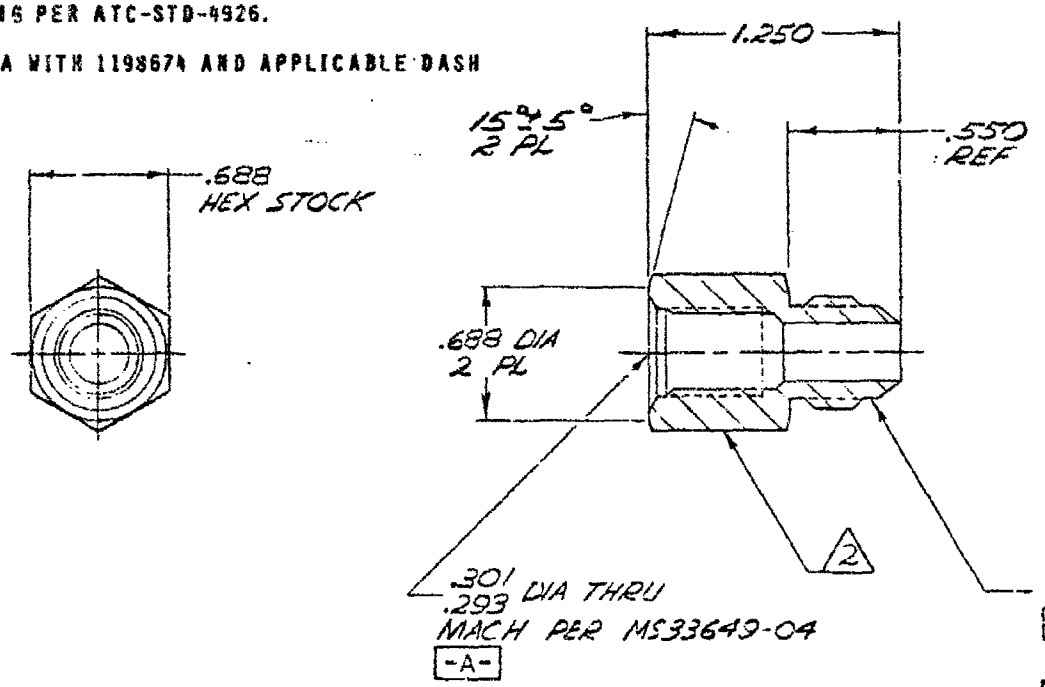

QTY REQ'D PER ASSY	FSCM NO	PART OR IDENTIFYING NO.	NOMENC DESC
		-1	

CONTRACT NO 15 3-24398

UNLESS OTHERWISE SPECIFIED: DIMENSIONS & TOLERANCING ARE IN INCHES & PER ANSI Y 14.5

TOLERANCES

DECIMALS	ANGULAR
.XX ± .03	± 2°
.XXX ± .010	

SURFACE ROUGHNESS

DO NOT SCALE DRAWING

DWG. LEVEL 2

DRAWN T. HARTNO

CHECK

DESIGN

DESIGN ACTIVITY

WEIGHTS

STRESS

MATERIALS & PROCESSES

MANUFACTURING ENGRG

QUALITY ASSURANCE

ADDITIONAL APPROVALS | DATE

DEVELOPMENT HARDWARE

FOR TEST OR EXPERIMENTATION

THIS DWG IS PER POLICY

REVISIONS				
ZONE	LTR	DESCRIPTION	DATE	APPROVED

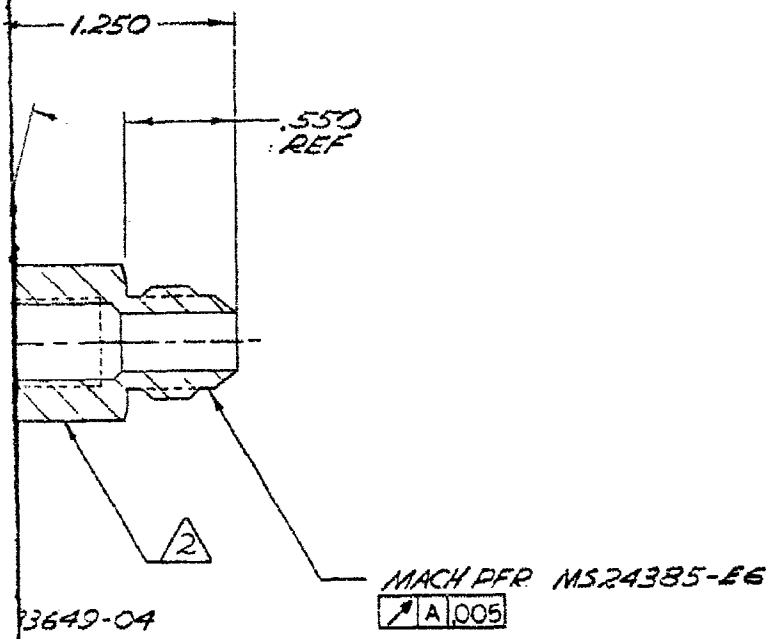

FOR RECORD ONLY. DO NOT FABRICATE TO THIS PRINT.

X RETAIN ORIGINAL VELLUM UNTIL July 1990

___ DESTROY ORIGINAL VELLUM AFTER MICROFILMING

AUTHORIZED CHECKER R L Wilson 89-9-25

1198674

QTY REQ'D PER ASSY	FSCM NO	PART OR IDENTIFYING NO.	NOMENCLATURE OR DESCRIPTION	MATERIAL SPECIFICATION	ITEM NO
		-1		CRES QQ-S-763 CL 347	

PARTS LIST

CONTRACT NO. NAS 3-24398

UNLESS OTHERWISE SPECIFIED: DIMENSIONS & TOLERANCING ARE IN INCHES & PER ANSI Y 14.5

TOLERANCES

DECIMALS	ANGULAR
.XX ± .03	± 2°
.XXX ± .010	

SURFACE ROUGHNESS

DO NOT SCALE DRAWING

DWG. LEVEL 2

DRAWN	T. HARTNOLL	DATE 85-7-[illegible]
CHECK	[illegible]	
DESIGN	R J Robinson	9-6-89
DESIGN ACTIVITY	R J Robinson	9-6-89

AEROJET TechSystems COMPANY

TITLE: FITTING

SIZE	FSCM NO	DWG NO
C	05824	1198674

SCALE	RELEASE DATE	SHEET
2/1	89-9-26	1 OF 1

2 THIS DWG HAS BEEN REVIEWED PER POLICY 27-1, 12-1-85

P.C. 481

NOTES:

1. INTERPRET DRAWING PER ATC-STD-4026.
2. MARK PER AS478-7A WITH 11908/5 AND APPLICABLE DASH NUMBER.

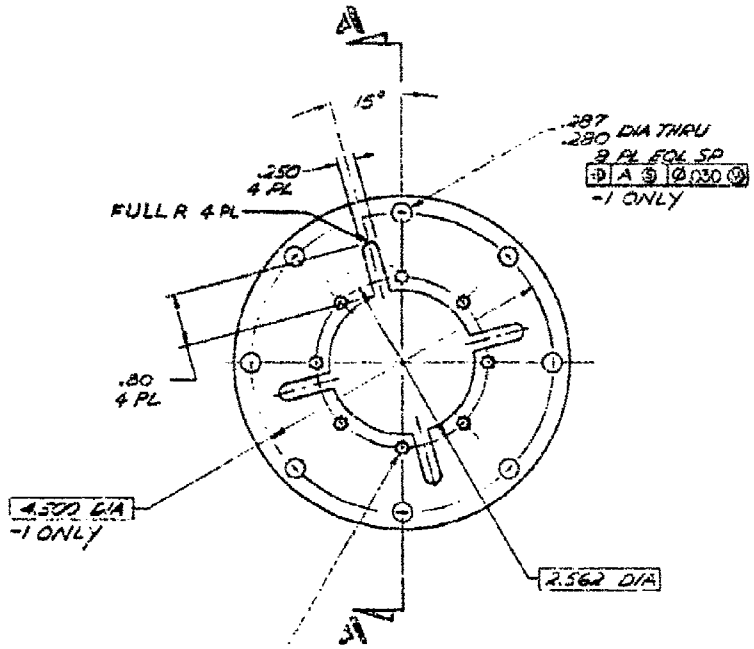

-1 SHOWN
-2 SAME AS -1 EXCEPT AS NOTED

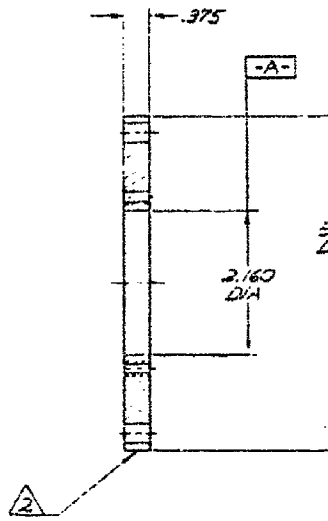

SECTION A-A

DEVELOPMENT HARDWARE
FOR TEST OR EXPERIMENTATION

LTR	DESCRIPTION	RELEASE DATE	APPROVED

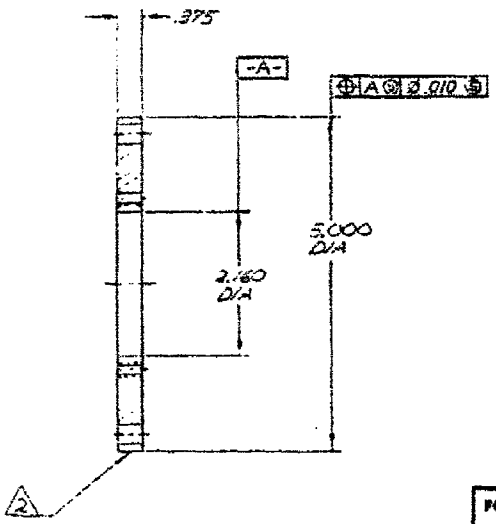

SECTION A-A

FOR RECORD ONLY. DO NOT FABRICATE TO THIS PRINT.
X RETAIN ORIGINAL VELLUM UNTIL July 1990
___ DESTROY ORIGINAL VELLUM AFTER MICROFILMING
AUTHORIZED CHECKER [illegible] 89-9-25

1198675

QTY REQ'D PER ASSY	FIGS NO.	PART OR IDENTIFYING NO.	NOMENCLATURE OR DESCRIPTION	MATERIAL SPECIFICATION	ITEM NO.
		-2		CRES QQ-S-763 CLASS 347 OR AMS 5511	2
		-1			1

PARTS LIST

CONTRACT NO. VAS 3-24399
UNLESS OTHERWISE SPECIFIED DIMENSIONS & TOLERANCES PER MIL-STD-100 & PER ANSI Y14.5
TOLERANCES: DECIMALS .XX ± .03, .XXX ± .010; ANGULAR ±2°
DO NOT SCALE DRAWING
DRAWN T. MARTINOLL DATE 85-2-6
CHECKED
ENGR
MFG
QA
SCALE 1/1
DWG LEVEL 2

REPORT TechSystems COMPANY

TITLE PLATE, THRUST

SIZE D | FICH NO. 05824 | DWG NO. 1198675

RELEASE DATE 89-9-26 | SHEET 1 of 1

THIS DWG IS SUBJ REVISION PER POLICY [illegible]

ES 421

DEVELOPMENT HARDWARE
TEST OR EXPERIMENTATION

NOTES

1. INTERPRET DRAWING PER ATC-STD-4926.
2. CENTER DRILL PERMISSIBLE. MAXIMUM SIZE PER COGNIZANT ENGINEER.
3. MARK PER AS478-7A WITH 1298692 AND APPLICABLE DASH NUMBER. OBLITERATE ORIGINAL IDENTIFICATION NO. WITHOUT DAMAGE TO THE PART.
4. SGL AUBURN SPARK PLUG CO., 89 YORK STREET, AUBURN, NEW YORK.
5. ALTER AS SHOWN.

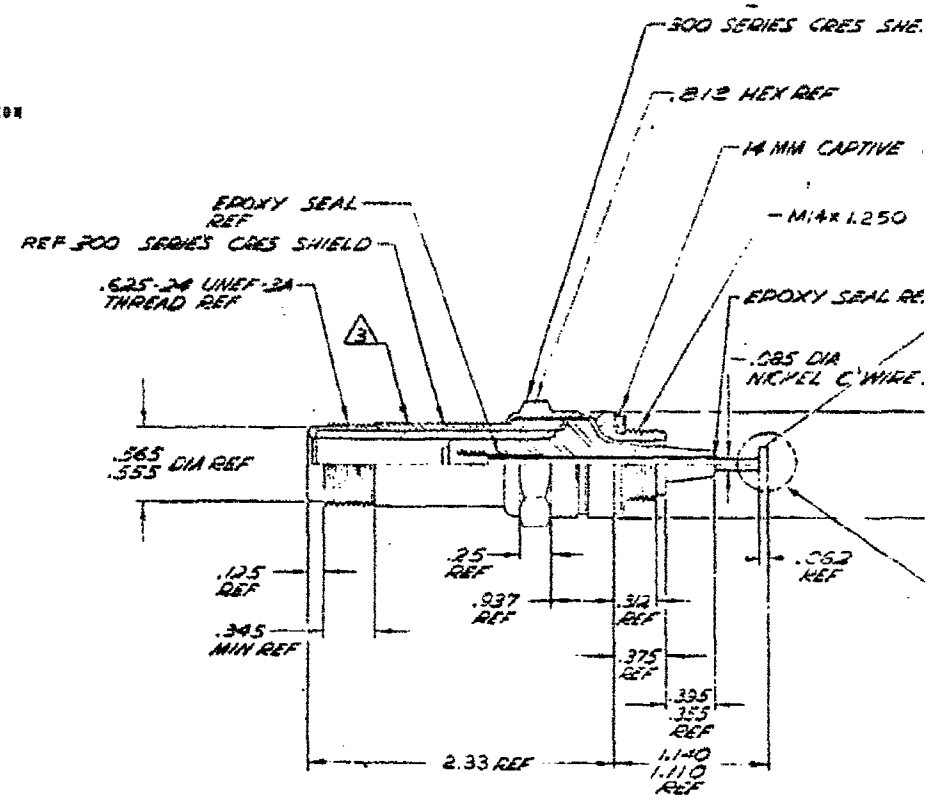

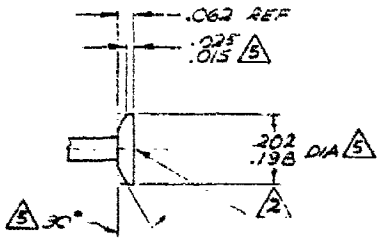

VIEW A

DEVELOPMENT HARDWARE
FOR TEST OR EXPERIMENTATION

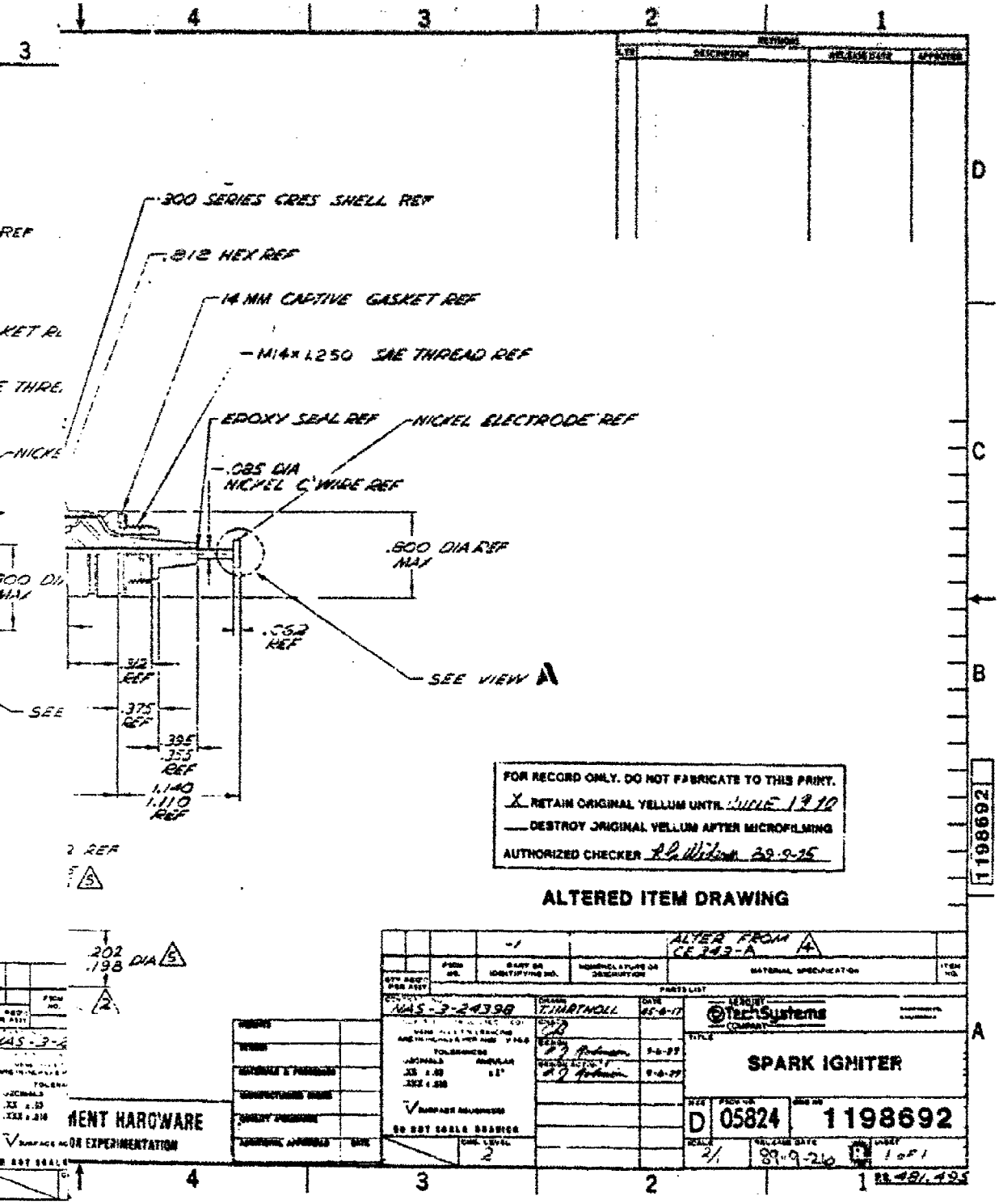
300 SERIES CRES SHELL REF
.812 HEX REF
14 MM CAPTIVE GASKET REF
M14x1.250 SAE THREAD REF
EPOXY SEAL REF
NICKEL ELECTRODE REF
.085 DIA NICKEL C'WIDE REF
.800 DIA REF MAX
.562 REF
SEE VIEW A
.312 REF
.375 REF
.395 .355 REF
1.140 1.110 REF
.202 .198 DIA
FOR RECORD ONLY. DO NOT FABRICATE TO THIS PRINT.
X RETAIN ORIGINAL VELLUM UNTIL
DESTROY ORIGINAL VELLUM AFTER MICROFILMING
AUTHORIZED CHECKER
ALTERED ITEM DRAWING
ALTER FROM CE 343-A
NAS-3-24398
TechSystems
SPARK IGNITER
D
05824
1198692
2/1
1 of 1
1198692

ZONE	LTR

NOTES:

1. INTERPRET DRAWING PER ATC-STD-4926.
2. PHOTO-ETCH FABRICATE USING NEGATIVE NUMBERS INDICATED.
3. MATERIAL SURFACE CONDITION SHALL BE FREE OF CUTS, DENTS AND SCRATCHES.
4. ACCEPTABLE ALTERNATE MATERIAL IS COLD-ROLLED, HALF-HARD COPPER STRIP PER QQ-C-576, TYPE TO BE OXYGEN-FREE, NO RESIDUAL DEOXIDANTS, OR ELECTROLYTIC TOUGH PITCH.
5. MARK PER AS478-37 WITH 1198832 AND APPLICABLE DASH NUMBER.

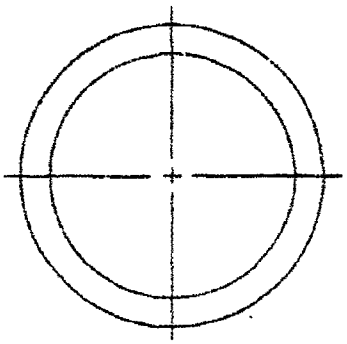

FOR RECORD ONLY. DO NOT FABRICATE TO THIS PRI

X RETAIN ORIGINAL VELLUM UNTIL July 199

___ DESTROY ORIGINAL VELLUM AFTER MICROFILMI

AUTHORIZED CHECKER R.L. Williams 89-9-25

DASH NO.	T DIM	NEGATIVE NO.
-1	.040 .030	3721
-2	.060 .050	3722

QTY REQ'D PER ASSY	FSCM NO	PART OR IDENTIFYING NO.	NOMENCLATURE OR DESCRIPTION
		-2	
		-1	

CONTRACT NO NAS 3-24398

UNLESS OTHERWISE SPECIFIED: DIMENSIONS & TOLERANCING ARE IN INCHES & PER ANSI Y 14.5

TOLERANCES

DECIMALS	ANGULAR
.XX ± .03	± 2°
.XXX ± .010	

SURFACE ROUGHNESS

DO NOT SCALE DRAWING

DWG. LEVEL 2

DRAWN T. HARTYCYL

CHECK J. Roth

DESIGN P.J. Robinson

DESIGN ACTIVITY P.J. Robinson

WEIGHTS	
STRESS	
MATERIALS & PROCESSES	
MANUFACTURING DATING	
QUALITY ASSURANCE	
ADDITIONAL APPROVALS	DATE

DEVELOPMENT HARDWARE

FOR TEST OR EXPERIMENTATION

THIS DW PER PO

REVISIONS				
ZONE	LTR	DESCRIPTION	DATE	APPROVED

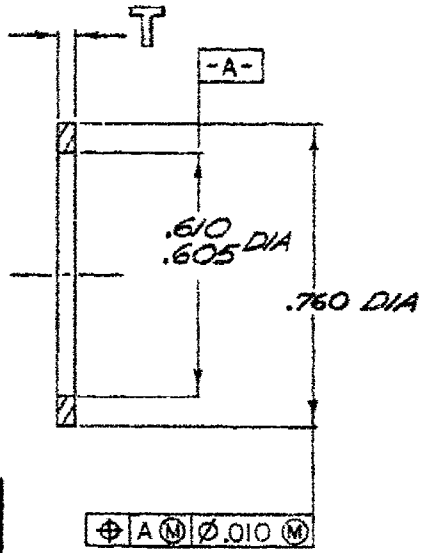

ONLY. DO NOT FABRICATE TO THIS PRINT.
ORIGINAL VELLUM UNTIL July 1990
ORIGINAL VELLUM AFTER MICROFILMING
CHECKER [illegible] 89-9-25

FSCM NO	PART OR IDENTIFYING NO.	NOMENCLATURE OR DESCRIPTION	MATERIAL SPECIFICATION	ITEM NO	REQ'D ASSY
	-2		COPPER PER ASTM-B152 UNS NO C10100, C10200 OR C11000 TEMPER H02 (3)(4)	2	
	-1			1	

PARTS LIST

CONTRACT NO S3-24398
UNLESS OTHERWISE SPECIFIED: DIMENSIONS & TOLERANCING ARE IN INCHES & PER ANSI Y 14.5
TOLERANCES: DECIMALS XX ±.03, XXX ±.010; ANGULAR ±2°
√ SURFACE ROUGHNESS
NOT SCALE DRAWING
DWG. LEVEL 2

		DATE
DRAWN	T. HARTYOLL	85-7-23
CHECK	[illegible]	
DESIGN	[illegible]	9-6-89
DESIGN ACTIVITY	[illegible]	9-6-89

AEROJET TechSystems COMPANY

TITLE: GASKET, SPARK IGNITER

SIZE	FSCM NO	DWG NO
C	05824	1198832

SCALE	RELEASE DATE	SHEET
4/1	89-9-26	1 OF 1

THIS DWG HAS BEEN REVIEWED PER POLICY 27-1, 10-1-85

P.G. 491

1198832

APPENDIX B

TEST DATA
FOR
THRUSTER NO. 1

AEROJET TechSystems COMPANY

SPACE STATION THRUSTER TEST SUMMARY

Mixture Ratio O/F	Total Duration (sec)	Total Impulse (lbF-sec)
2	60	1,302
3	240	5,107
4	3,735	89,526
5	224	5,576
6	221	4,728
7	17,563	428,997
8	155	3,221
Total:	22,198	538,457

AEROJET TechSystems COMPANY

SPACE STATION THRUSTER TEST SUMMARY

Fuel Film Cooling (%)	Mixture Ratio O/F	Total Duration (sec)	Total Impulse (lbF-sec)
59	3	60	1,662
	4	980	26,221
	5	55	1,386
	6	19	456
64	3	60	1,602
	4	687	16,458
	5	72	1,749
74	4	1,547	35,949
	5	97	2,441
85	4	271	6,314
	7	17,219	420,063
	8	51	1,056
87	2	60	1,302
	4	120	2,184
	6	120	2,376
	8	66	1,332
88	6	60	1,314
	8	38	833
92	3	120	1,843
	4	130	2,400
	6	22	582
95	7	344	8,934
	Total:	22,198	538,457

AEROJET TechSystems COMPANY

SPACE STATION AUXILIARY THRUST CHAMBER TECHNOLOGY

CONTRACT NAS 3-24398

TEST DATA SUMMARY FOR THRUSTER S/N 001

TEST CONFIGURATION CONSISTS OF INJECTOR S/N 002, ORIGINAL SLEEVE DESIGN, 87% FFC AND AMBIENT GH2 INLET TEMPERATURE

Test No.	O/F	F (lbF)	Pc (Psia)	ISP_v/ISP_n (lbF-sec/lbm)	T bulk (°F)	Tbs,max (°F)	QF/CP	Duration (sec)	Comments
1	4.0								Fuel valve cold flow Test No. 1
2	4.0								Oxidizer valve cold flow Test No. 1
3	4.0								Oxidizer valve cold flow Test No. 2
4	4.0								Fuel valve cold flow Test No. 2
5	4.0								Simultaneous Fuel & Oxid valve cold flow
101	4.0								Simultaneous Fuel & Oxid valve cold flow
104	4.0							5	Ignition checkout
105	3.77							5	Ignition checkout
106								20	Ignition checkout
107								60	No data recorded during test
108	4.09	18.6	52.8	333	328	395	3.28	60	Data recorded, same conditions as No. 107
112	5.07	20.1	54.2	307	485	563	4.34	60	Ignition

TEST CONFIGURATION CONSISTS OF INJECTOR S/N 002, ORIGINAL SLEEVE DESIGN, 87% FFC AND AMBIENT GH2 INLET TEMPERATURE

Test No.	O/F	F (lbF)	Pc (Psia)	ISP_v/ISP_n (lbF-sec/lbm)	T bulk (°F)	Tbs,max (°F)	QF/CP	Duration (sec)	Comments
113	7.71	20.6	55.6	302	502	801	3.72	20	
GH2 Inlet Temp. Change from Ambient to Sub-Cooled (-80° F)									
114	4.18	17.8	50.9	329	212	283	3.26	60	
115	6.03	19.5	52.7	302	334	406	4.03	60	
116	7.76	20.0	52.4	306	546	812	4.93	46	TFJ kill @ 550°F
119	2.18	21.7	59.9	373	87.1	124	2.87	60	
Injector S/N Change from 002 to 001 GH2 Inlet Temp. Change from Sub-Cooled to Ambient; % FFC Change from 87% to 92%									
123	4.04	17.4	47.8	326	212		1.80	10	Good test
124	3.96	25.8	69.6	340	346	376	4.51	60	517 OX; 303 Fuel Good test
125	4.17	11.3	32.9	341	388	464	2.25	60	237 OX; 303 Fuel Low Pc @ 33 Psia

TEST CONFIGURATION CONSISTS OF INJECTOR S/N 001, ORIGINAL SLEEVE DESIGN, 92% FFC AND AMBIENT GH2 INLET TEMPERATURE

Test No.	O/F	F (lbF)	Pc (Psia)	ISP_v/ISP_n (lbF-sec/lbm)	T bulk (°F)	Tbs,max (°F)	OF/CP	Duration (Sec)	Comments
126	3.43	6.21	18.5	371	328	396	1.15	60	Low Pc @ 18.5
128	6.19	26.2	70.9	345	543	783	5.24	22.2	Temp. kill @ 550°F
129	3.21	24.5	66.1	350	292	347	3.95	60	OK
% FFC Change from 92% to 63.9%									
134	4.14	32.4	85.2	404	498	549	7.13	60	High Pc, High F
140	3.96	25.9	68.5	410/410	504	561	6.07	60	
142	2.95	26.7	70.7	430/430	366	415	5.20	60	
146	4.69	24.1	63.6	393	545	609	5.62	25.6	TFJ kill @ 550°F Kill should have been 600° for this test
147	4.74	24.4	64.3	392	596	659	6.22	46.4	TFJ kill @ 600°F
% FFC Change from 63.9% to 59.2%									
153	3.93	26.6	69.8	421/421	504	607	6.10	60	Good test
154	3.03	27.7	73.1	438/439	388	470	5.57	60	Good test

AEROJET TechSystems COMPANY

TEST CONFIGURATION CONSISTS OF INJECTOR S/N 001, ORIGINAL SLEEVE DESIGN, 59.2% FFC AND AMBIENT GH2 INLET TEMPERATURE

Test No.	O/F	F (lbF)	Pc (Psia)	ISP_v/ISP_n (lbF-sec/lbm)	T bulk (°F)	Tbs,max (°F)	QF/CP	Duration (sec)	Comments
156	5.67	23.6	62.0	387	591	752	5.24	19.315	TFJ kill @ 600°F
164	5.03	25.2	65.8	399	596	771	6.07	55	TFJ kill @ 600°F
166	4.12	26.6	70.4	413	495	640	5.96	120	Good test
167	4.14	27.1	70.7	418/418	498	637	5.99	300	Good test - steady state (i.e. thermal equilibri
171	4.03	26.6	68.6	423/423	507	644	5.84	500.115	Manual kill to check facility temp.
% FFC change from 59.2% to 74%. GH2 Inlet Temp. change from Ambient to -80°F.									
172	4.13	21.6	57.8	381/380	485	559	4.67	60	Low F (21.6) and PC Hot test full duration
173	3.98	26.1	69.6	384/384	451	518	5.29	60	Good test
174	4.95	25.0	66.2	364/363	546	614	5.66	36.9	TFJ kill @ 550°F
175	4.99	25.3	66.6	365/365	590	663	6.19	60	Good test; full duratior

AEROJET TechSystems COMPANY

TEST CONFIGURATION CONSISTS OF INJECTOR S/N 001, ORIGINAL SLEEVE DESIGN, 74% FFC AND AMBIENT GH2 INLET TEMPERATURE

Test No.	O/F	F (lbF)	Pc (Psia)	ISP_v/ISP_n (lbF-sec/lbm)	T bulk (°F)	Tbs,max (°F)	QF/CP	Duration (sec)	Comments
176	4.05	26.4	70.8	385/385	464	528		328	Facility kill @ 328 sec; One booster pump blower shut down
182	4.11	27.0	71.2	386/386	479	532	5.58	437	Facility kill @ 437 sec due to high cell pressure
183	4.01	21.9	58.9	385/385	507	562	5.00	217	21.9 lbf test - facility kill @ 217 sec due to high cell pressure
184	4.03	17.7	47.5	392/392	544	610	4.48	445	Facility kill due to high cell pressure
Sleeve changed from original design to modified design. % FFC changed from 74% to 88%.									
186	6.00	21.9	60.1	332/332	579	749	5.18	60	
187	7.63	22.0	60.2	341/341	583	949	4.31	20	
GH2 Inlet Temp. change from Ambient to -100°F									
189	8.12	21.8	60.0	309/312	490	862	4.56	18	TC3 kill due to high temp
% FFC change from 88% to 85%.									
191	8.09	20.7	54.3	291/295	575	780	5.33	51	TC3 kill @ 900°F

AEROJET TechSystems COMPANY

TEST CONFIGURATION CONSISTS OF INJECTOR S/N 001, MODIFIED SLEEVE DESIGN, 85% FFC AND 100°F GH2 INLET TEMPERATURE

Test No.	O/F	F (lbF)	Pc (Psia)	ISP_v/ISP_n (lbF-sec/lbm)	T bulk (°F)	Tbs,max (°F)	QF/CP	Duration (sec)	Comments
192	7.08	20.8	54.4	302/306	561	656		60	Good run
193	7.17	21.4	54.4	307/310	556	628		600	Good run - TFJ=550°F TC4=750°F - Pduct=.32 ps
199	7.34	25.7	65.5	308/311	550	643		600	Good run - TFJ=540°F TC4=750°F - Pduct=.36 ps
GH2 Inlet Temp. change from -100°F to -90°F									
202	3.71	23.3	62.7	335/338	146	195	3.53	271	Kill due to high Pduct @ 0.66 psia
% FFC Change from 85% to 95% and GH2 Inlet Temp. change from -90°F to -100°F									
208	7.11	27.5	74.0	326/329	574	950	7.06	275	TC4 Temp kill @ 900°F
209	6.85	18.9	50.5	316/319	508	888		30	TC3A Temp kill @ 900°F
GH2 Inlet Temp. change from -100°F to -85°F									
214	6.99	20.6	55.8	312/315	479	824		39	TC3A Temp kill @ 900°F

AEROJET TechSystems COMPANY

TEST CONFIGURATION CONSISTS OF INJECTOR S/N 001, ORIGINAL SLEEVE DESIGN, 85% FFC and -90° F GH2 INLET TEMPERATURE

Test No.	O/F	F (lbF)	Pc (Psia)	ISP_v/ISP_n (lbF-sec/lbm)	T bulk (°F)	Tbs,max (°F)	OF/CP	Duration (sec)	Comments
215	6.78	21.1	55.5	294/297	454	843	5.19	16.8	TC3A kill @ >900° F
216	6.61	21.4	55.9	294/297	473	840	5.66	14.7	TC3A kill @ >900° F
Sleeve design change from Original to Modified. GH2 Inlet Temp. change from -90° F to -80° F									
219	7.27	21.3	56.5	311/314	523	723	5.38	60	Good test
222	7.26	22.9	58.8	322/326	560	669	5.87	600	Good test
224	7.29	24.4	61.9	327/331	563	707	6.20	900	Good test; Inspected sleeve & polished I.D.
231	7.38	24.3	61.6	327/330	552	701	6.03	900	Good test
232	7.48	23.6	62.0	318/321	597	810	6.33	54	TFJ @ 600° F
235	7.36	24.1	61.4	325/328	556	720	6.04	900	Good test; removed sleeve. Slight discoloration inside. Cleaned & reinstalled.
236	7.26	24.7	61.6	329/332	550	649	6.13	1200	Good test; Sleeve slightly rough at previous discoloration. Polished, cleaned & reinstalled.

AEROJET Tech Systems COMPANY

TEST CONFIGURATION CONSISTS OF INJECTOR S/N 001, MODIFIED SLEEVE DESIGN, 85% FFC AND -80° F GH2 INLET TEMPERATURE

Test No.	O/F	F (lbF)	Pc (Psia)	ISP_v/ISP_n (lbF-sec/lbm)	T bulk (°F)	Tbs,max (°F)	QF/CP	Duration (sec)	Comments
239	7.36	24.8	61.9	331/335	535	690	5.93	1200	Good test; sleeve appears smooth. Polished, cleaned & reinstalled
240	7.25	22.9	60.8	322/325	491	601	5.61	250	Manual kill due to rising P-cell = .14
244	7.42	23.9	59.9	332	509	612	5.74	572	Manual kill due to rising P-cell
245	7.24	24.4	60.5	315/318	516	614	5.71	1624	Kill due to high cell pressure
251	7.20	23.3	62.1	309/312	510	606	5.81	415	Kill due to high cell pressure
GH2 Inlet Temperature change from -80° F to -100° F									
260	7.14	23.2	62.4	310/313	510	603	5.84	364	Good test; Pduct = 0.5
269	7.15	20.4	52.4	315/318	576	688	5.31	664	Good test. Kill due to high cell pressure. Pduct=0.5
Sleeve design change from Modified to Original. % FFC change from 85% to 64%									
273	4.09	23.4	66.0	388/391	365	438	5.60	183	Good run; kill due to high cell pressure. Pduct=0.5

AEROJET TechSystems COMPANY

TEST CONFIGURATION CONSISTS OF INJECTOR S/N 001, ORIGINAL SLEEVE DESIGN, 64% FFC and -100° F GH2 INLET TEMPERATURE

Test No.	O/F	F (lbF)	Pc (Psia)	ISP_v/ISP_n (lbF-sec/lbm)	T bulk (°F)	Tbs,max (°F)	QF/CP	Duration (sec)	Comments
274	4.04	8.16	27.7	132/135	61.9	31.0	1.21	19	
277	4.09	23.4	65.9	388/391	360	429	5.57	182	Good run; Pduct = 0.5
279	4.14	23.3	65.8	386/389	364	430	5.61	183	Good run; Pduct = 0.5
Sleeve design change from Original to Modified. % FFC change from 64% to 85%, from -100°F to -85°F GH2 Inlet Temperature change									
285	7.32	25.5	66.5	331/335	565	627	6.35	1206	Good test
GH2 Inlet Temperature change from -85° F to -80° F									
304	7.31	25.4	66.1	330/333	566	632	6.40	1501	Good test
307	7.18	24.9	65.4	328/332	556	618	6.31	1317	Good test
311	7.47	25.6	66.3	327/331	568	637	6.39	2200	Good test

AERO TEK Systems COMPANY

SPACE STATION AUXILIARY THRUST CHAMBER TECHNOLOGY

CONTRACT NAS 3-24398

SUMMARY OF TEST CONDITIONS FOR THRUSTER S/N 001

Sleeve Design	FFC	GH2 Inlet Temp.	F/Pc (lbF/psia)	O/F	Isp (lbF-sec) / (lbm)	T_{bulk} (°F)	$T_{B.S.}$ (°F)	Comments
Original	87%	Ambient	20/54	4,6,8	302-333	328-502	395-801	3 Tests, 60 sec. each
Original	87%	Sub-Cooled	18-22/51-60	2,4,6,8	302-373	87-546	124-812	4 Tests, 60 sec. each
Original	92%	Ambient	6-26/18-71	3,4,6	340-371	292-543	347-783	5 Tests, 60 sec. each
Original	64%	Ambient	24-32/64-85	3,4,5	392-430	366-596	415-659	5 Tests, 60 sec. each
Original	59%	Ambient	24-28/62-73	3,4,5,6	387-438	388-596	470-771	7 Tests, 20 sec. to 500 sec.
Original	74%	Ambient	18-27/48-71	4,5	364-392	451-590	518-663	8 Tests, 40 sec. to 445 sec.
Modified	88%	Ambient	22/60	6,8	332-341	579-583	749-949	2 Tests, 60 sec. and 20 sec.
Modified	88%	Sub-Cooled	22/60	8	309	490	862	1 Test, 18 sec.
* Modified	85%	Sub-Cooled	21-26/54-66	4,7,8	291-335	146-575	195-780	5 Tests, 60 sec., 270 sec. and 600 sec.
*‡ Modified	95%	Sub-Cooled	19-28/50-74	7	312-326	479-574	824-950	3 Tests, 30 sec. to 275 sec.
Original	85%	Sub-Cooled	21/55	7	292-299	458-478	848	2 Tests, 15 sec. each

AEROJET TechSystems COMPANY

Sleeve Design	FFC	GH2 Inlet Temp.	F/Pc (lbF/psia)	O/F	Isp (lbF-sec) / (lbm)	T_{bulk} (°F)	$T_{B.S.}$ (°F)	Comments
Modified	85%	Sub-Cooled	22-25/58-63	7	320-337	500-550	650-720	14 Tests, 9700 sec.
Original	64%	Sub-Cooled	23-24/66-67	4	380-397	360-364	437	4 Tests, 182 sec. each
Modified	85%	Sub-Cooled	25-26/65-67	7	329-340	552-573	~675	4 Tests, 1206 sec., 1500 sec., 1317 sec. and 2200 sec. Total: 6223 sec.

* Cell pressure instrumentation was reading incorrectly, i.e. bad calibration; therefore, Isp values can be as much as 20 lbF-sec/lbm higher than shown. Exact correction is being determined.

‡ Entries below the indicated run are based on "quick-look" data during testing; post test data reduction is still in progress.

AEROJET TechSystems COMPANY

APPENDIX C

OUTLINE OF PERFORMANCE PREDICTION METHODOLOGIES

Simplified Procedure

$$I_{SP_{Delivered}} = I_{SP_{ODE}} \times \eta_{KIN}\ \eta_{DIV} \times \eta_{ERE} - \frac{\Delta FBL}{\dot{M}}$$

$\eta_{KINETIC} = I_{SP_{ODK}} / I_{SP_{ODE}}$

$\eta_{DIV} = I_{SP_{TDE}} / I_{SP_{ODE}}$

η_{ERE} = Vaporization/Mixing Analysis; Test Data

ΔFBL = Turbulent Boundary Layer Code

Rigorous Procedure

$$I_{SP_{Delivered}} = \frac{1}{M_T} \sum_{i=1}^{N} \dot{M}_i \quad I_{SP_{TDK}} - \frac{FBL}{\dot{M}}$$

$\dot{M}$ = Mass in Each Stream Tube From SDER/CICM

$I_{SP_{TDK}}$ = Two Dimension Kinetic ISP in Each Stream Tube

ΔFBL = Thrust Decrements in Boundary Layer From Blimp Code (or BLM Option of TDK)

Figure C-1. Aerojet Has Used Both Simplified and Rigorous JANNAF Performance Procedure In Past to Predict Performance

APPENDIX D

DETAILED DRAWINGS
SPACE STATION THRUSTER NO. 2

Drawing No.	Title
1201414	Chamber Assembly
1201415	Thrust Chamber Assembly
1201417	Body Igniter
1201418	Integral Igniter Injector Assembly
1201419	Igniter Sleeve Assembly
1201420	Washer, Flow Balancing
1201422	Igniter, Spark
1201423	Valve, Propellant
1201424	Thrust Plate

NOTES

1. INTERFACT DRAWING PER ATC-STD-4025.

2. ALL DIAMETERS ON A COMMON AXIS [feature control frame: -A- B -C- 0.010] UNLESS OTHERWISE NOTED.

3. CONTAMINATION CRITICAL HARDWARE. CLEANLINESS PER ATC-STD-4040, LEVEL 2000 INTERNAL SURFACES, AND LEVEL VC EXTERNAL SURFACES. SSA IS 1.0 SQ FT.

4. (flag) BLEND AS NECESSARY TO PRODUCE A SMOOTH AND CONTINUOUS CONTOUR BETWEEN ESTABLISHED POINTS.

5. (flag) ELECTRON BEAM WELD PER ATC-STD-4037-1.

6. (flag) FUSION WELD PER ATC-48351, USING (21).

7. (flag) USE (24) AS FILLER MATERIAL BETWEEN (1) AND (2) PRIOR TO ELECTRON BEAM WELDING PER NOTE 5.

8. PENETRANT INSPECT MACHINED SURFACES PER ATC-STD-4042, TYPE I, METHOD A, EXCEPT ETCHING NOT REQUIRED. ACCEPTANCE CRITERIA PER ATC-STD-4008, CLASS I, UNLESS OTHERWISE NOTED.

9. (flag) INDICATED DIMENSIONS ARE NON-MANDATORY (NFS DATA ONLY).

10. (flag) MATCH MACHINE INDICATED DIAMETER TO MATING DIAMETER TO PROVIDE A .018 TO .022 INCH DIAMETRICAL CLEARANCE FIT.

11. (flag) MATCH MACHINE INDICATED DIAMETER TO MATING DIAMETER TO WITHIN .005 TO .010 INCH DIAMETRICAL CLEARANCE FIT.

12. (flag) MATCH MACHINE INDICATED DIAMETER OF (2) AND INDICATED DIAMETER OF (3) TO WITHIN .010 INCH.

13. PROTECTIVE CLOSURES REQUIRED AT ALL PORTS TO PROTECT INTERNAL PASSAGES DURING HANDLING, SHIPPING AND STORAGE. REMOVE ONLY AS NECESSARY.

14. (flag) THIS SURFACE TO BE FREE OF STEPS, CHATTER MARKS AND FLATS. NO AXIAL OR SPIRAL SCRATCHES, SCORES, DENTS, ETC. ARE PERMITTED EXCEEDING 40 MICROINCHES DEPTH AND WIDTH.

15. (flag) DRY HYDROGEN OR VACUUM BRAZE PER COGNIZANT ENGINEER, USING (23).

16. (flag) PRIOR TO BRAZING, ALTER THERMOCOUPLE (30) AND INSTALL PER COGNIZANT ENGINEER.

17. (flag) CHAMBER WALL THICKNESS SHALL BE MEASURED NORMAL TO THE INNER WALL SURFACE, CHANNEL DEPTH NORMAL TO THE CHANNEL BOTTOM SURFACE AND ELECTROFORMED NICKEL THICKNESS NORMAL TO THE OUTER SURFACE OF THE CHAMBER LINER (1).

18. (flag) ELECTROFORM NICKEL PER COGNIZANT ENGINEER TO AREAS AND WITH THICKNESSES INDICATED. PRIOR TO APPLYING NICKEL, A THIN LAYER OF COPPER (.010 MAXIMUM THICKNESS) SHALL BE ELECTROFORMED TO CLOSE-OUT THE CHAMBER LINER (1) CHANNELS.

19. (flag)
   A. AMZIRC ZIRCONIUM COPPER ALLOY (CDA 150) OF THE FOLLOWING COMPOSITION:
      99.8% OFHC COPPER (INCLUDING SILVER AND .001% MAXIMUM OXYGEN)
      .10-.20% ZIRCONIA
   B. FORGING REQUIREMENTS: HOT, UPSET AND CROSS GRAIN FORGED WITH DIAMETRAL SECTIONS TO BE TAKEN FOR UNIFORMITY OF MICROSTRUCTURE, GRAIN SIZE, COMPOSITION, AND FREEDOM FROM CENTER DEFECTS (BURSTS, CRACKS, VOIDS, PIPING, ETC.).
   C. ULTRASONIC INSPECT PER MIL-STD-2154, CLASS B.

20. (flag) ACCEPTABLE ALTERNATE MATERIAL -- LOW-CARBON NICKEL UNS N02201 PER ASTM B160 OR B162, CONDITION AND FINISH OPTIONAL.

21. (flag) PENETRANT INSPECT FUSION WELDS PER ATC-STD-4042, TYPE I, METHOD A. ACCEPTANCE CRITERIA PER ATC-STD-4005, CLASS I.

22. (flag) RADIOGRAPHICALLY INSPECT WELDS PER ATC-STD-4019. ACCEPTANCE CRITERIA PER ATC-STD-4005, CLASS I.

23. (flag) MARK PER AS478-7A WITH [illegible], APPLICABLE DASH NO. AND AEROJET TECHSYSTEMS COMPANY (ATC) ASSIGNED SERIAL NO.

24. (flag) AFTER ELECTRON BEAM WELDING, MACHINE INDICATED SURFACE TO PROVIDE REQUIRED OVERALL CHAMBER LENGTH OF 8.030 ± .003 INCHES.

25. MILLIPORE FILTERS (PACH NO. 68071) RATED AT 100 MICRONS ABSOLUTE, OR LOWER, SHALL BE USED WHEN FLOWING ANY FLUID THROUGH THE CHAMBER ASSEMBLY.

26. AFTER FINAL MACHINING OF ELECTROFORMED NICKEL SURFACES IN PREPARATION OF ELECTRON BEAM WELDING (2) TO (1), REMOVE WAX FROM COOLANT CHANNELS AND VERIFY WAX REMOVAL PER COGNIZANT ENGINEER. ALL COOLANT CHANNELS SHALL FLOW FULL AND UNIFORM.

27. PROOF AND LEAK TESTS: THE CHAMBER ASSEMBLY SHALL BE SUBJECTED TO TEMPERATURE COMPENSATED PROOF AND LEAK TESTS AS FOLLOWS:
   A. CHANNEL PROOF TEST: USING CLEAN, DRY GN_2, PRESSURIZE THE CHANNELS TO 960 ± 10 PSIG FOR 3 MINUTES MINIMUM. THERE SHALL BE NO EVIDENCE OF PERMANENT DEFORMATION OR FAILURE OF THE INNER CHAMBER WALL.
   B. CHAMBER PROOF TEST: USING CLEAN, DRY GN_2, PRESSURIZE THE CHANNELS TO 460 ± 10 PSIG AND THE CHAMBER INTERIOR TO 500 ± 10 PSIG FOR 3 MINUTES MINIMUM. THERE SHALL BE NO EVIDENCE OF PERMANENT DEFORMATION OR FAILURE OF THE ELECTROFORMED NICKEL JACKET.
   C. CHANNEL LEAK TEST: USING CLEAN, DRY GN_2, PRESSURIZE THE CHANNELS TO 720 ± 10 PSIG FOR 5 MINUTES MINIMUM. THERE SHALL BE NO EVIDENCE OF LEAKAGE GREATER THAN 1×10^{-3} SCCS ALLOWED.

28. PERFORM FLOW CALIBRATION TEST ON THE CHAMBER COOLANT CIRCUIT PER COGNIZANT ENGINEER, AS FOLLOWS: USING CLEAN, DRY GN_2, FLOW TO ATMOSPHERIC PRESSURE AT INLET PRESSURES OF 1.0, 2.0, 4.0, 6.0, 8.0, 10.0, 12.0 AND 15.0 PSIG. FOR EACH DATA POINT, RECORD THE INLET PRESSURE, GN_2 FLOW RATE AND NOMINAL GN_2 FLOW TEMPERATURE.

29. AFTER PROOF AND LEAK TESTS PER NOTE 27, PENETRANT INSPECT ELECTROFORMED NICKEL JACKET PER ATC-STD-4042, TYPE I, METHOD A. THE NICKEL SURFACE SHALL BE FREE OF CRACKS, POROSITY AND VOIDS.

30. VENDOR SHALL PROVIDE ELECTRON BEAM WELDING SAMPLES THAT SIMULATE WELD JOINTS BETWEEN (2) AND (3).

31. MEASUREMENTS OF THE CHAMBER LINER (1) OUTER SURFACE SHALL BE RECORDED TO BE USED FOR FUTURE REFERENCE DURING ELECTROFORMING PER NOTE 18 TO DETERMINE NICKEL THICKNESSES.

32. (flag) ELECTROFORMED NICKEL THICKNESS AND TOLERANCE IS AS INDICATED, EXCEPT IN THE CYLINDRICAL REGION OF THE CHAMBER WHERE THE SPECIFIED OUTER DIAMETER CONTROLS THE THICKNESS OF THE NICKEL.

33. (flag) PRECISION INDUSTRIAL COMPONENTS CORP., P.O. BOX 1079, BENSON ROAD, MIDDLEBURY, CT 06762.

DEVELOPMENT H
FOR TEST OR EXPERI

LTR	DESCRIPTION	REVISION DATE	APPROVED
A	SEE A DCN	3	9-7-5-[illegible]
B	SEE B DCN	8	87-1A-[illegible]

7	AR	71543		BRAZE ALLOY	NO. 1600-N FOIL .005 THK			25
14	AR			BRAZE ALLOY	NI 040 POWDER AMS 4787	3	0	24
								23
								22
5	AR			WELD WIRE	E2 NiCrMo-3 OR E2 NiCrMo-3 AWS A5.14			21
18	16	93768	402-2101	THERMO-COUPLE	TYPE BS ASSY GROUNDED JUNCTION	4	3	20
								19
								18
								17
2			MS 9350 CA 201	INSERT		2	0	16
1			MS 20819 -CEN	SLEEVE		2	0	15
19	2		040-250	PIN, DOWEL		2	5	14
								13
	1		AN 315 -3-4	NUT		2	0	12
								11
	AR				ELECTROFORMED NICKEL 18			10
	1		-9	LINER JACKETED		5	0	9
								8
								7
								6
								5
								4
	1		-5	TUBE	[illegible]	2	0	3
20	1		-2	RING MANIFOLD	NICKEL JUNG WELDED ASSY [illegible]	2	0	2
	1		-1	LINER CHAMBER	18	4	0	1

1201414 B

QTY REQ'D ASS'Y	QTY REQ'D SUBASSY	ITEM NO	PART OR IDENTIFYING NO	NOMENCLATURE OR DESCRIPTION	MATERIAL SPECIFICATION	TOTAL	LTR

NAS3-24398

REFERENCE DESIGNATIONS

TOLERANCES

DO NOT SCALE DRAWING

SHEET 1

REVISIONS

TechSystems CORPORATION

CHAMBER ASSEMBLY

E 05824 1201414

2/1 1 OF 8

DEVELOPMENT HARDWARE
FOR TEST OR EXPERIMENTATION

HARDWARE
DEVELOPMENT

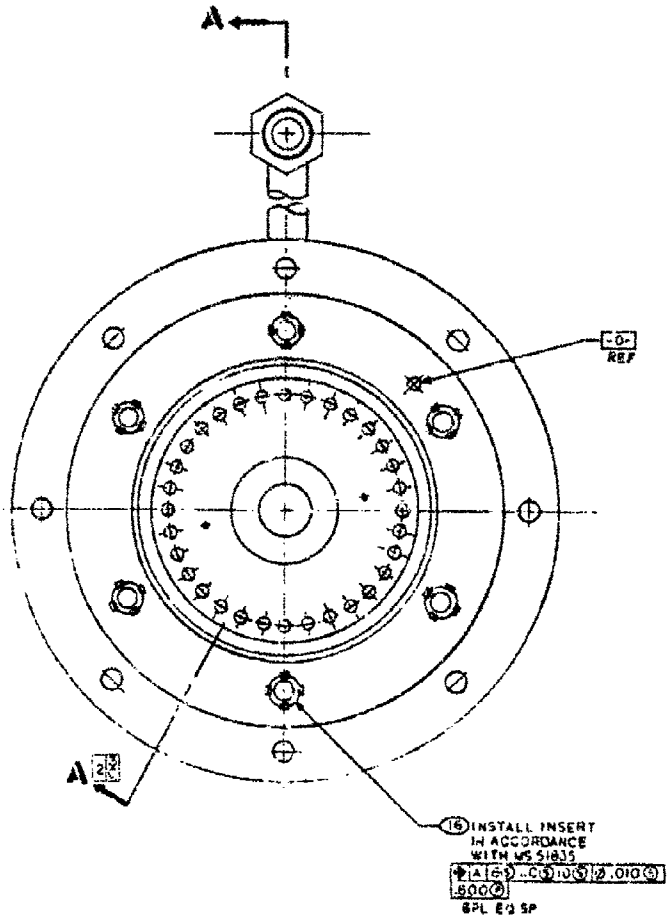
A
-D-
REF
A
16 INSTALL INSERT
IN ACCORDANCE
WITH MS 51835
.600
6PL E/S SP

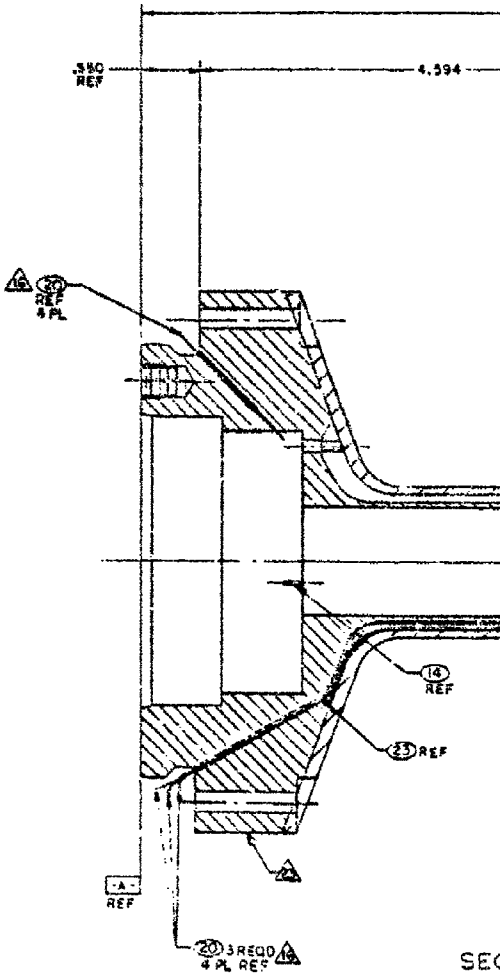
.350
REF
4.594
REF
4 PL
14
REF
23 REF
-A-
REF
20 3 REQD
4 PL REF

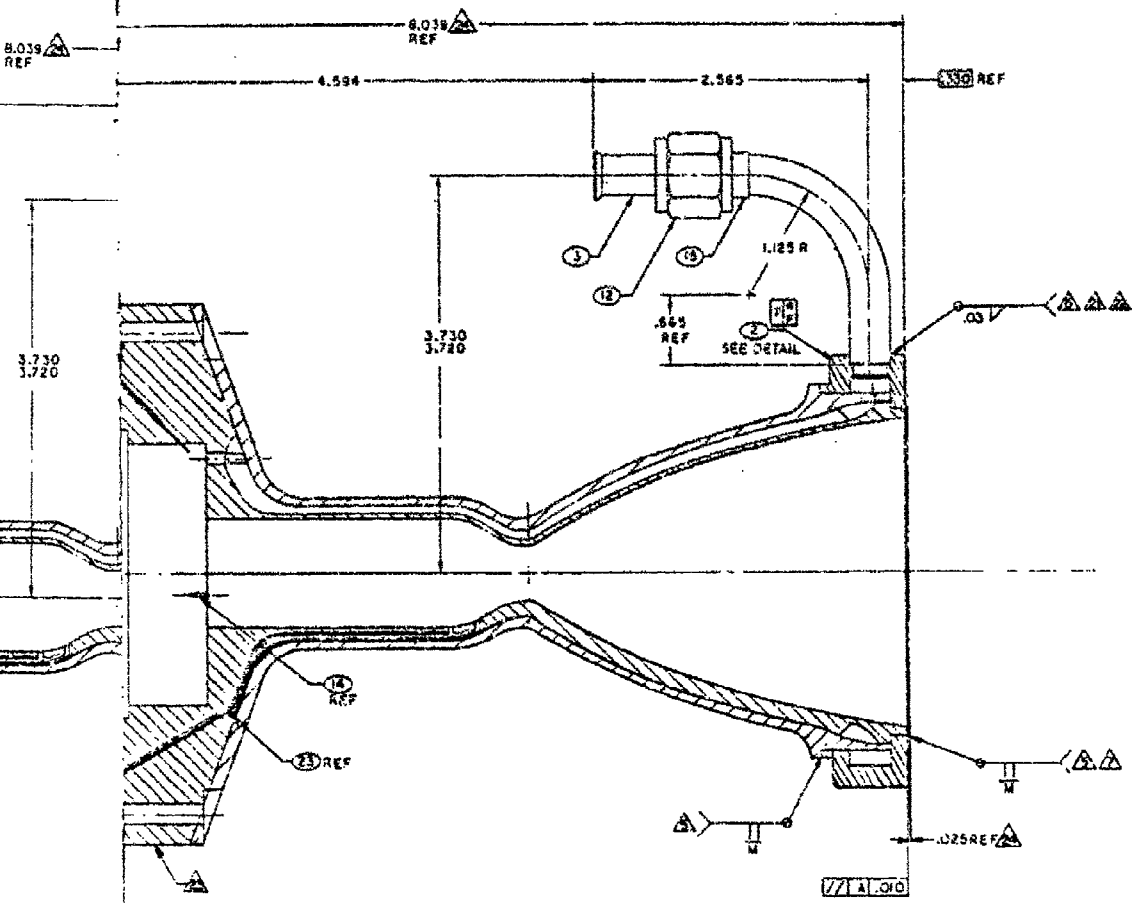

E	05824	1201414

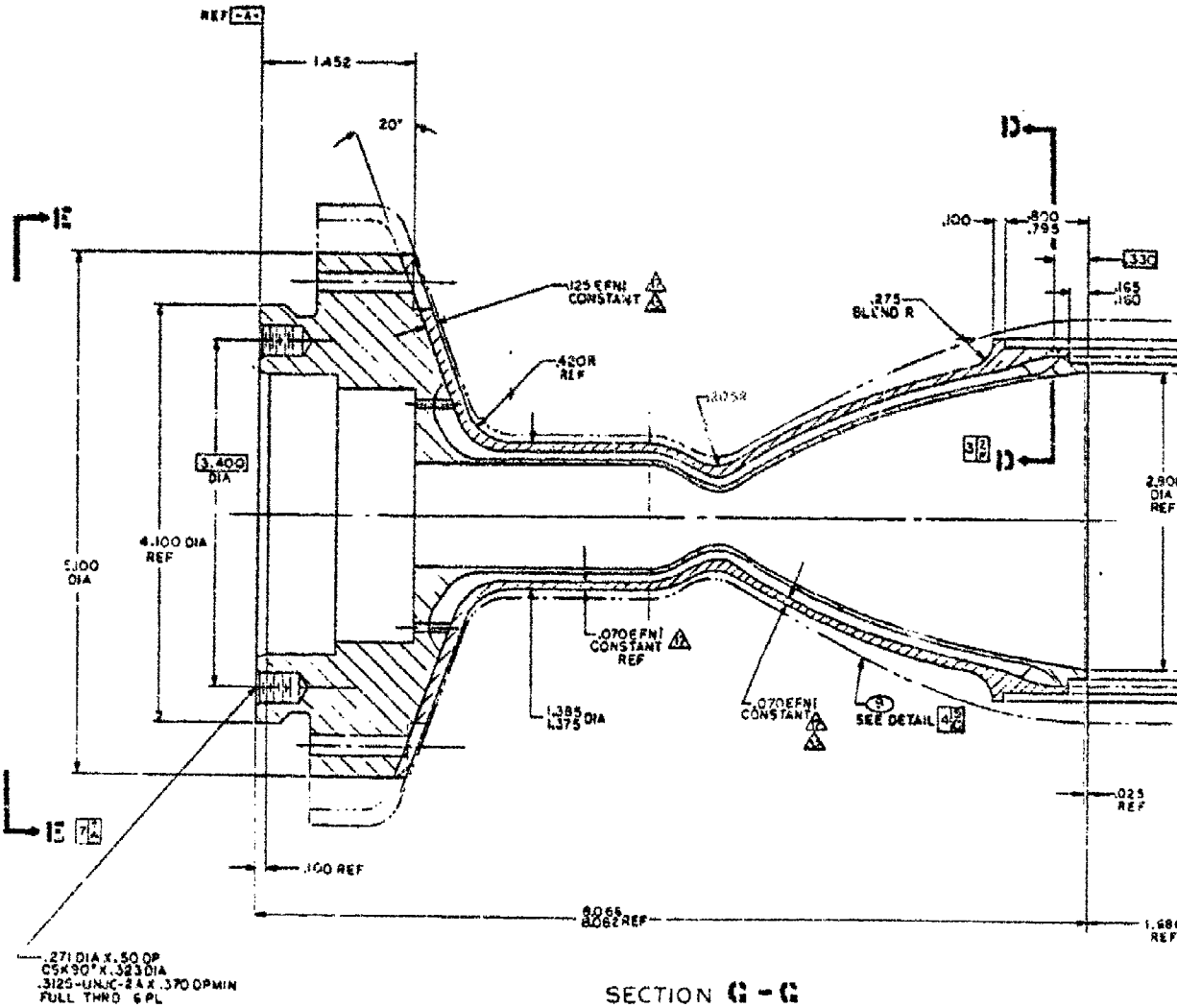
REF -A-
1.452
20°
.125 FNI CONSTANT
.420R REF
.375 BLEND R
.100
.800 .795
.330
.165 .160
3.400 DIA
4.100 DIA REF
5.100 DIA
.070 FNI CONSTANT REF
1.385 1.375 DIA
.070 FNI CONSTANT
SEE DETAIL
.025 REF
.100 REF
8.065 8.062 REF
.271 DIA X .50 DP
C5X 90° X .323 DIA
.3125-UNJC-2 A X .370 DP MIN
FULL THRD 6 PL

SECTION G - G

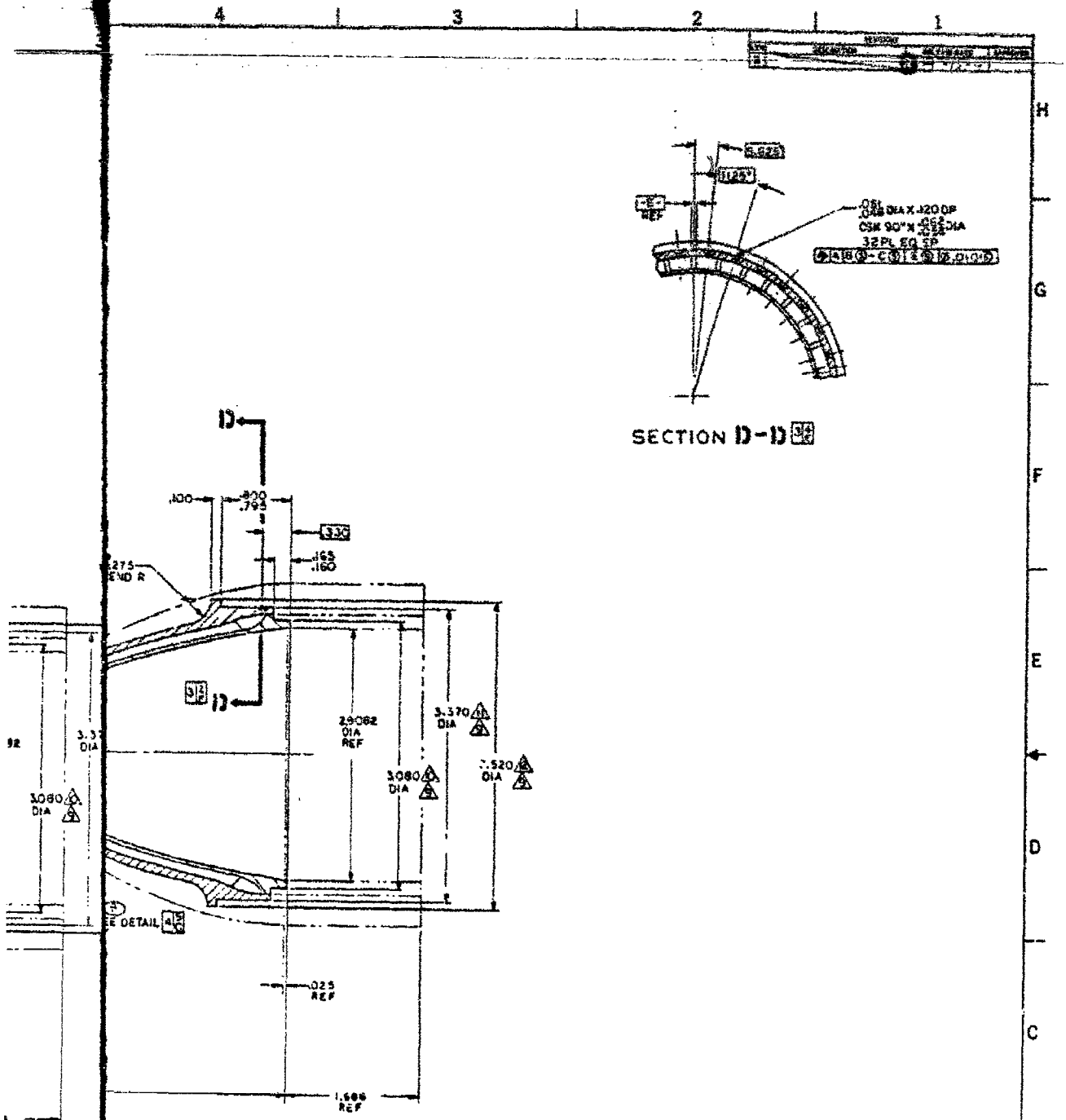

E	05824	1201414

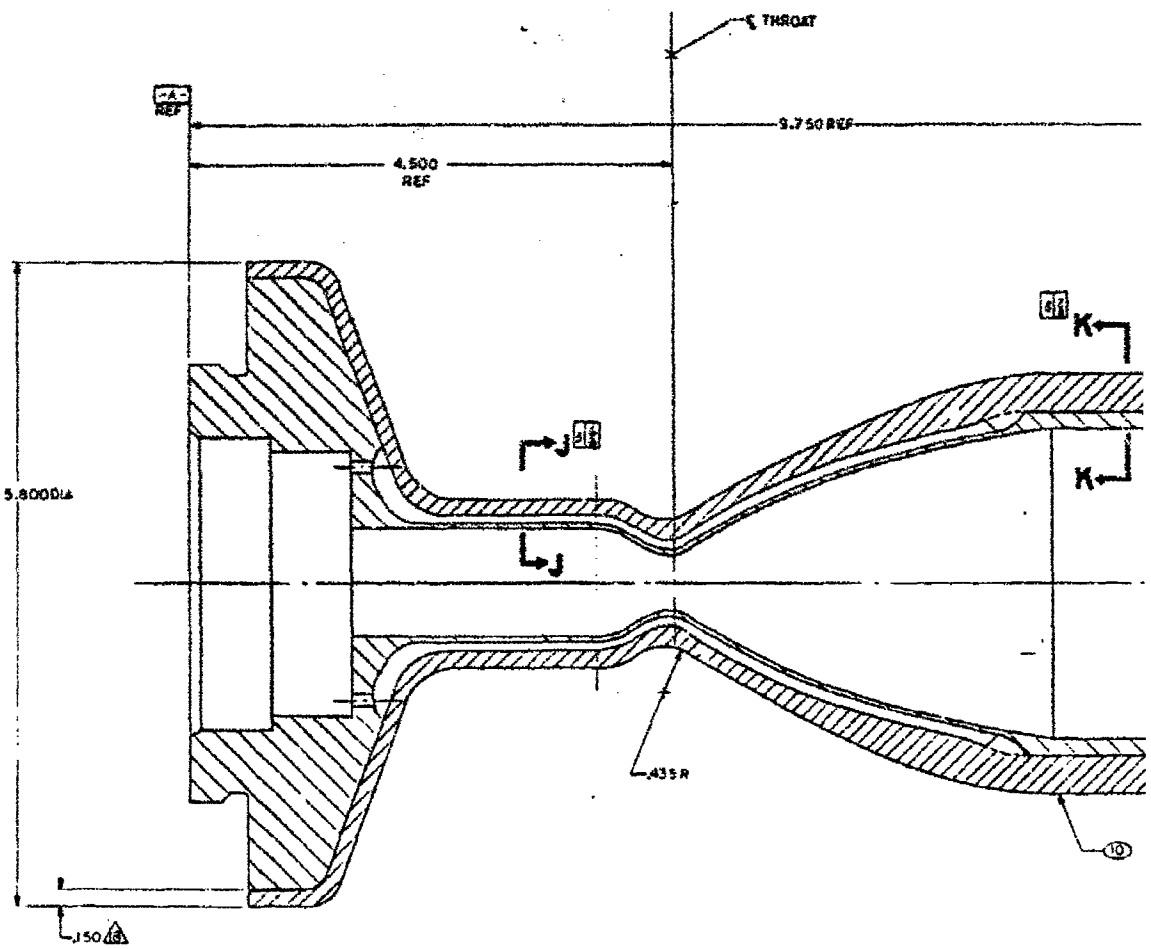

9 DETAIL

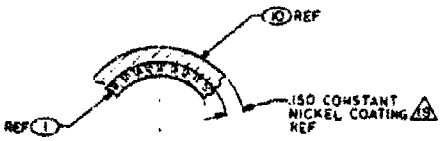

VIEW J-J

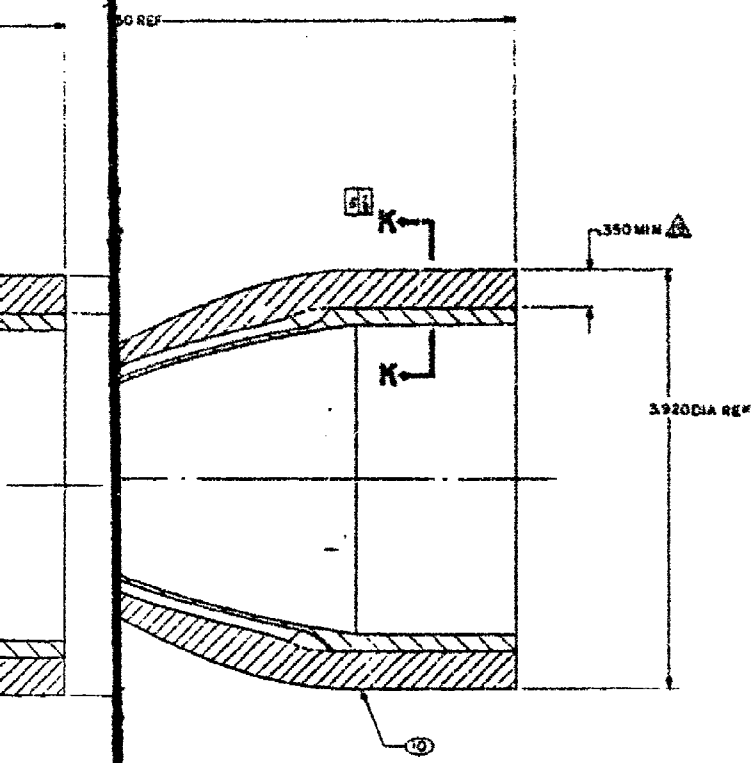

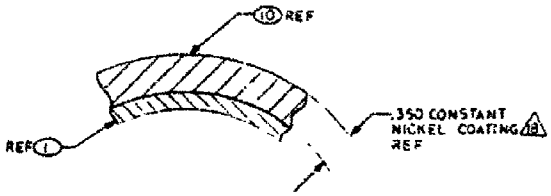

VIEW **K-K**

E	05824	1201414

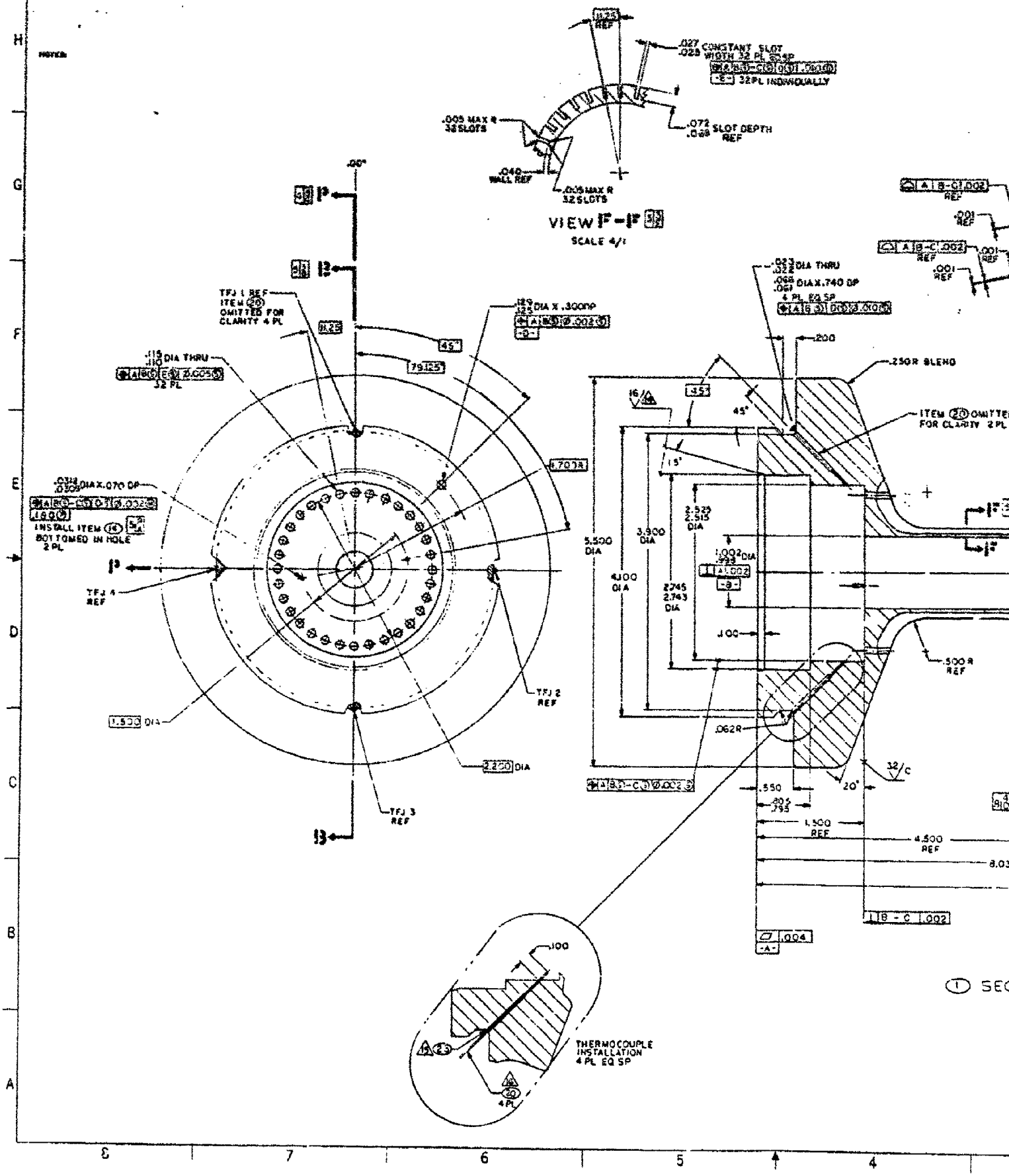
VIEW F-F
SCALE 4/1
.027 .029 CONSTANT SLOT WIDTH 32 PL EQ SP
32PL INDIVIDUALLY
.072 .068 SLOT DEPTH REF
.005 MAX R 32 SLOTS
.040 WALL REF
.005 MAX R 32 SLOTS
TFJ 1 REF ITEM 20 OMITTED FOR CLARITY 4 PL
.115 .110 DIA THRU 32 PL
.125 .123 DIA X .300 DP
45°
79.125°
6.700 R
.250 R BLEND
ITEM 20 OMITTED FOR CLARITY 2 PL
.034 .030 DIA X .070 DP
INSTALL ITEM 16 BOTTOMED IN HOLE 2 PL
TFJ 4 REF
TFJ 2 REF
TFJ 3 REF
1.500 DIA
2.250 DIA
5.500 DIA
4.100 DIA
3.900 DIA
2.529 2.515 DIA
2.745 2.743 DIA
.062 R
.500 R REF
1.500 REF
4.500 REF
THERMOCOUPLE INSTALLATION 4 PL EQ SP
4 PL

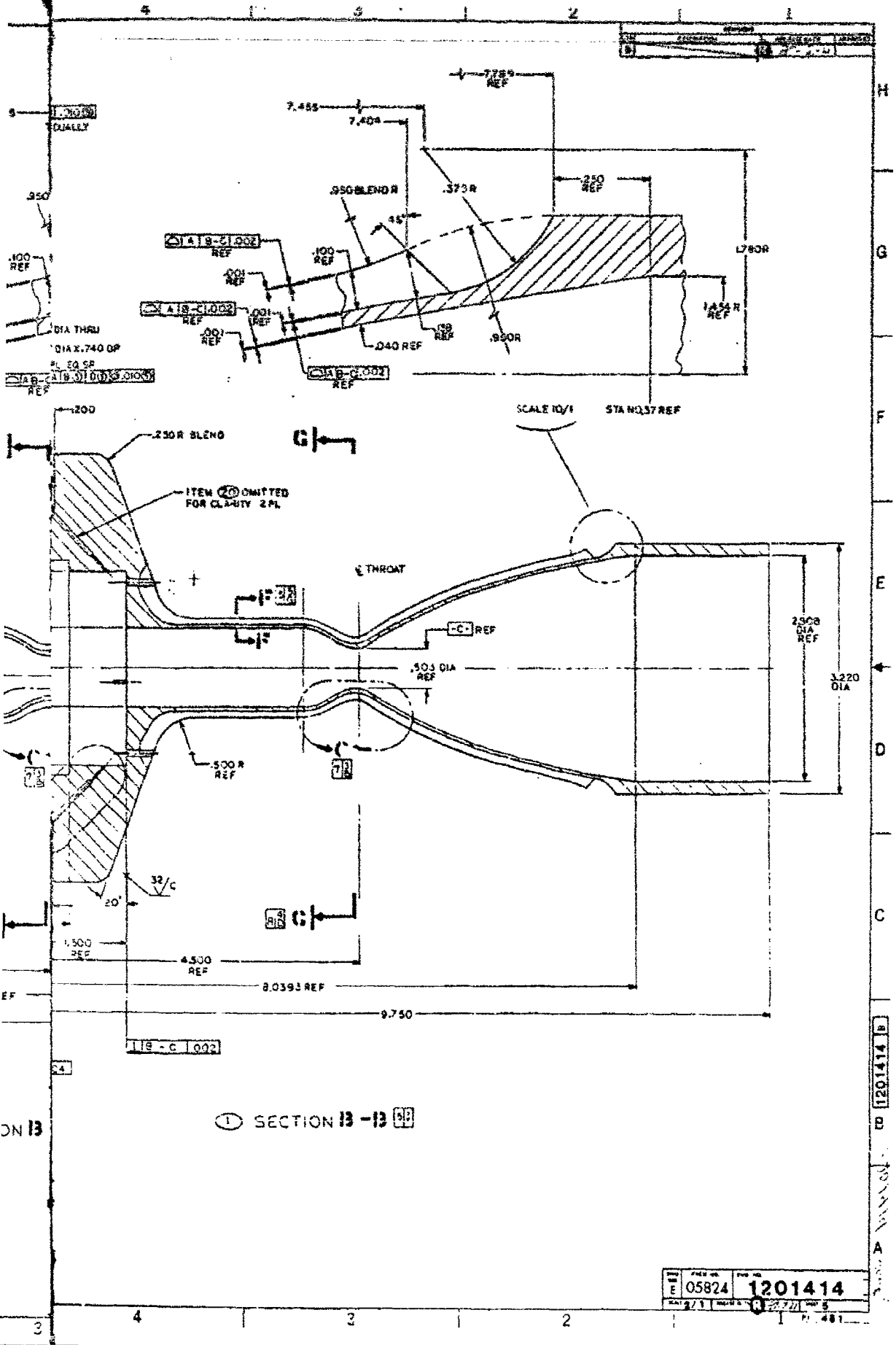
7.785 REF
7.455
7.404
.950 BLEND R
.373 R
.250 REF
45°
.100 REF
.001 REF
.001 REF
.001 REF
.040 REF
.159 REF
.950 R
1.780 R
1.454 R REF
.200
.250 R BLEND
ITEM 20 OMITTED FOR CLARITY 2 PL
SCALE 10/1
STA NO.37 REF
℄ THROAT
.503 DIA REF
2.508 DIA REF
3.220 DIA
.500 R REF
32/c
20°
1.500 REF
4.500 REF
8.0393 REF
9.750
SECTION B-B
1201414
05824
E

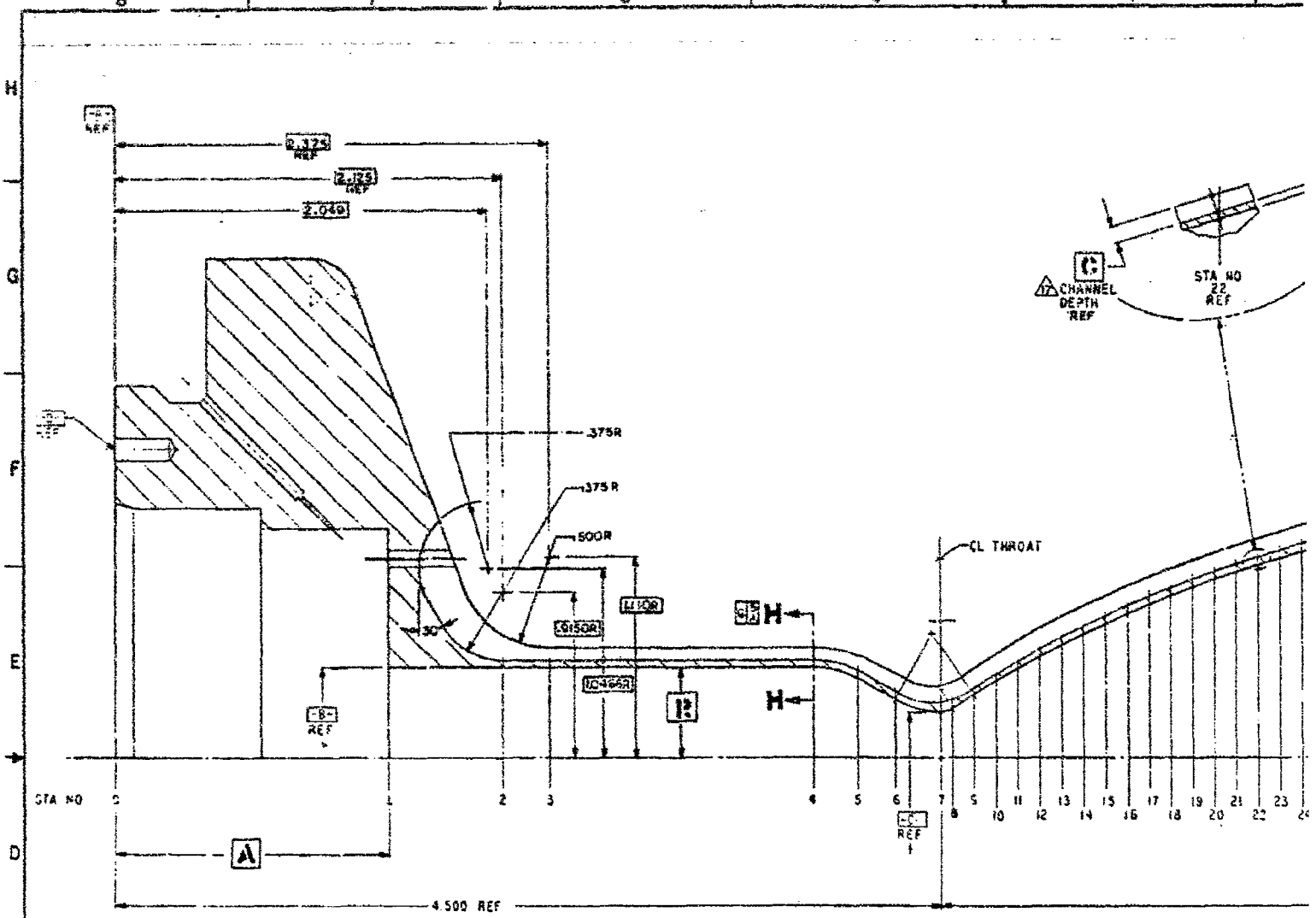

SECTION P - P
SCALE 4/1

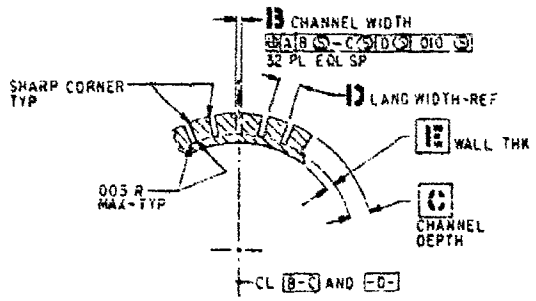

SECTION H - H

STA NO	A	R	B	C
20	5.1950	.1800	.0250	.1[illegible]
19	5.5786	.3275	.0250	.1[illegible]
18	5.7538	.3928	.0250	.1[illegible]
17	5.9411	.4482	.0250	.1[illegible]
16	5.5248	.7671	.0250	.1[illegible]
15	5.4438	.7898	.0250	.1[illegible]
14	5.3819	.8069	.0250	.1[illegible]
13	5.1919	.8240	.0250	.1[illegible]
12	5.0928	.8881	.0250	.1[illegible]
11	4.9250	.9572	.0250	.1[illegible]
10	4.8018	.9188	.0250	.1[illegible]
9	4.6794	.9429	.0250	.1[illegible]
8	4.5416	.9679	.0250	.1[illegible]
7	4.5000	.9919	.0250	.1[illegible]
6	4.2500	1.0182	.0250	.1[illegible]
5	4.0519	1.0330	.0250	.1[illegible]
4	3.8019	1.0486	.0250	.1[illegible]
3	2.5750	1.5000	.0250	.1[illegible]
2	2.1250	1.5000	.0250	.1[illegible]
1	1.5000	1.5000	—	—
0	0.0000	—	—	—

STATION CO

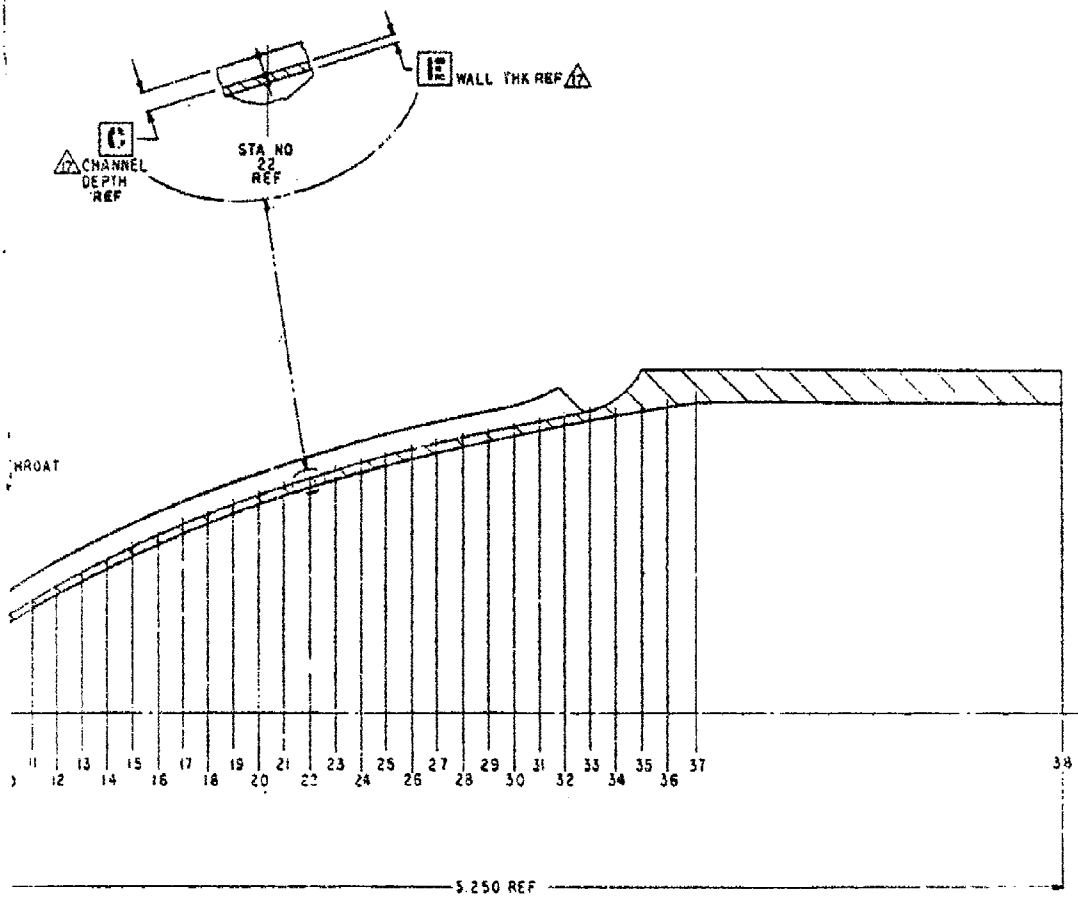

STA NO	A DIA ± .0000	R RADIUS BASIC	B CHANNEL WIDTH ± .0020	C CHANNEL DEPTH BASIC	D LAND WIDTH REF AT O.D.	E WALL THK BASIC	NOTATION REF
20	5.7958	.0000	.0250	.1000	.195	.0400	
19	5.6766	.0375	.0250	.1000	.185	.0400	
18	5.7500	.0828	.0250	.1000	.176	.0400	
17	5.8411	.0861	.0250	.1000	.168	.0400	
16	5.5248	.1591	.0250	.1000	.157	.0400	
15	5.4838	.1938	.0250	.1000	.146	.0400	
14	5.2319	.2000	.0250	.1000	.134	.0400	
13	5.1819	.2250	.0250	.1000	.122	.0400	
12	5.0420	.2601	.0250	.1000	.108	.0400	
11	4.9256	.2932	.0250	.1000	.095	.0400	
10	4.8018	.3180	.0250	.1000	.085	.0400	
9	4.6739	.3420	.0250	.1000	.084	.0400	
8	4.5416	.3670	.0250	.0000	.085	.0400	TANGENT POINT 4
7	4.5000	.3919	.0250	.0000	.085	.0400	CL THROAT 4
6	4.2500	.3102	.0250	.0000	.080	.0400	TANGENT POINT 3
5	4.0819	.4170	.0250	.0000	.075	.0400	TANGENT POINT 2
4	3.8819	.5000	.0250	.0000	.065	.0400	TANGENT POINT 1
3	2.5750	.5000	.0250	.0000	.065	.0400	
2	2.1250	.5000	.0250	.1372	.100	.0400	
1	1.5000	.0000	---	---	---	---	BEGINNING OF CONTL SECTION
0	0.0000	---	---	---	---	---	DATUM A

STATION CONTOUR COORDINATES

STA NO	A DIA ± .0000	R RADIUS BASIC	B CHANNEL WIDTH ± .0020	C CHANNEL DEPTH BASIC	D LAND WIDTH REF AT O.D.	E WALL THK BASIC	NOTATION REF
38	3.7586	1.9541			---		END OF LINER
37	4.0265	1.4541			---		CHANGE CUT. ∠ = 33.46
36	7.9825	1.4538			---		
35	7.7830	1.4146			---		MANIFOLD ENDPOINT
34	7.6838	1.3996			---		MANIFOLD
33	7.5000	1.3716			---		MANIFOLD
32	7.4256	1.3516	.0250	.1240	.272	.0400	CHANGE ENDPOINT
31	7.3066	1.3294	.0250	.1000	.263	.0400	
30	7.1800	1.3092	.0250	.1000	.258	.0400	
29	7.0600	1.2894	.0250	.1000	.252	.0400	
28	6.9407	1.2513	.0250	.1000	.247	.0400	
27	6.8200	1.2212	.0250	.1000	.242	.0400	
26	6.7100	1.1935	.0250	.1000	.236	.0400	
25	6.5910	1.1624	.0250	.1000	.230	.0400	
24	6.4735	1.1298	.0250	.1000	.223	.0400	
23	6.3500	1.0957	.0250	.1000	.216	.0400	
22	6.2354	1.0581	.0250	.1000	.209	.0400	
21	6.1111	1.0205	.0250	.1000	.201	.0400	

COORDINATES CONTINUED

SIZE	CODE IDENT NO.	DRAWING NO.
E	05824	1201414

SCALE 2/1 SHEET 3 OF 4 REV 0

1201414

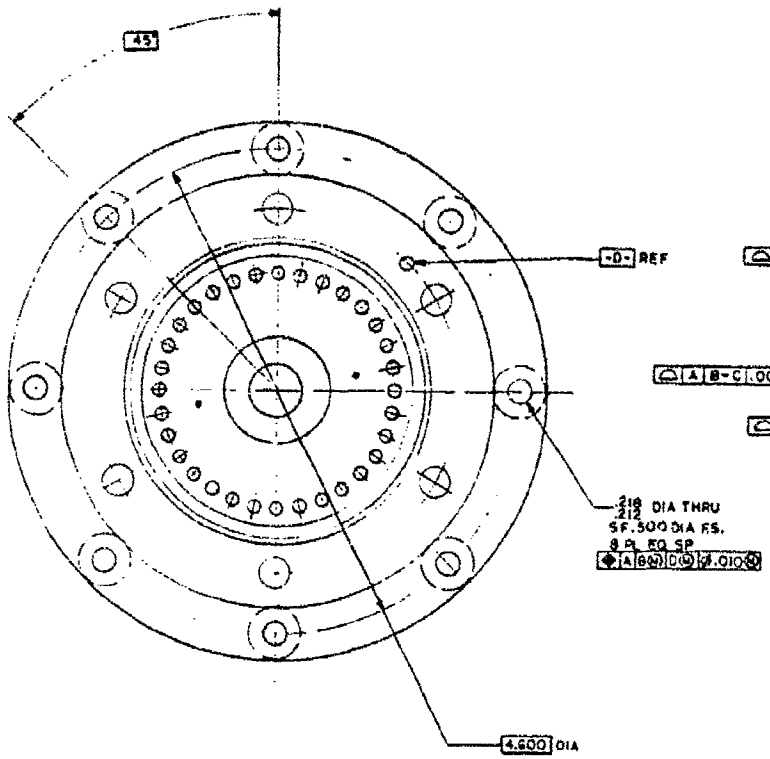
45°
-D- REF
.218 .212 DIA THRU
SF .500 DIA F.S.
8 PL EQ SP
4.600 DIA

VIEW E-E

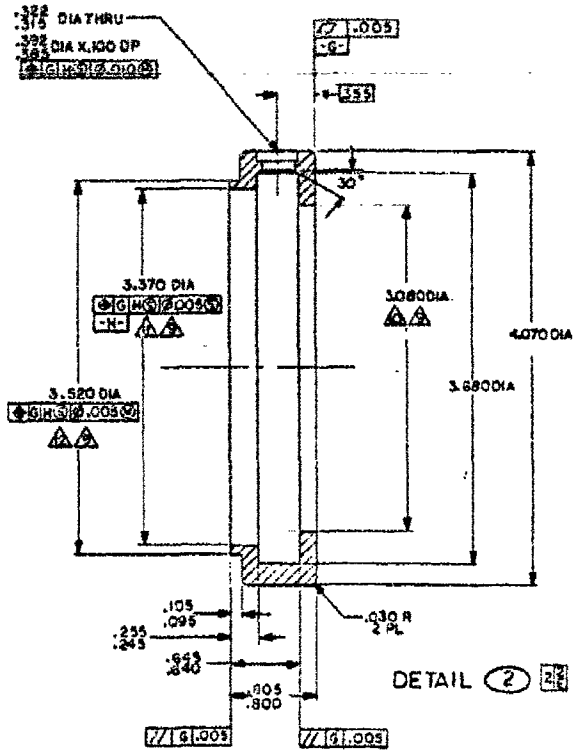
.322 .315 DIA THRU
.392 .385 DIA X .100 DP
.005
-G-
.355
30°
3.370 DIA
-N-
3.080 DIA
4.070 DIA
3.680 DIA
3.520 DIA
.105 .095
.255 .245
.945 .940
.805 .800
.030 R 2 PL
DETAIL 2

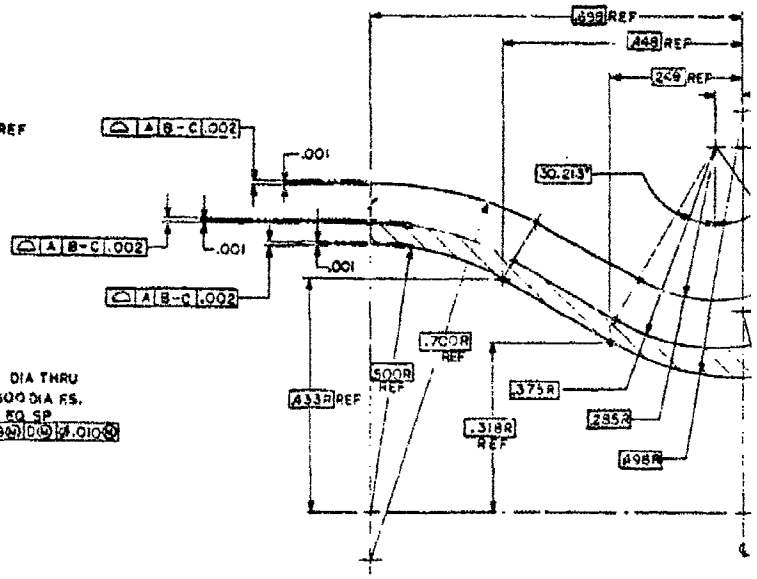
.898 REF
.449 REF
.269 REF
A B-C .002
.001
30.213°
.700R REF
.500R REF
.433R REF
.375R
.318R REF
.285R
.095R

VIEW

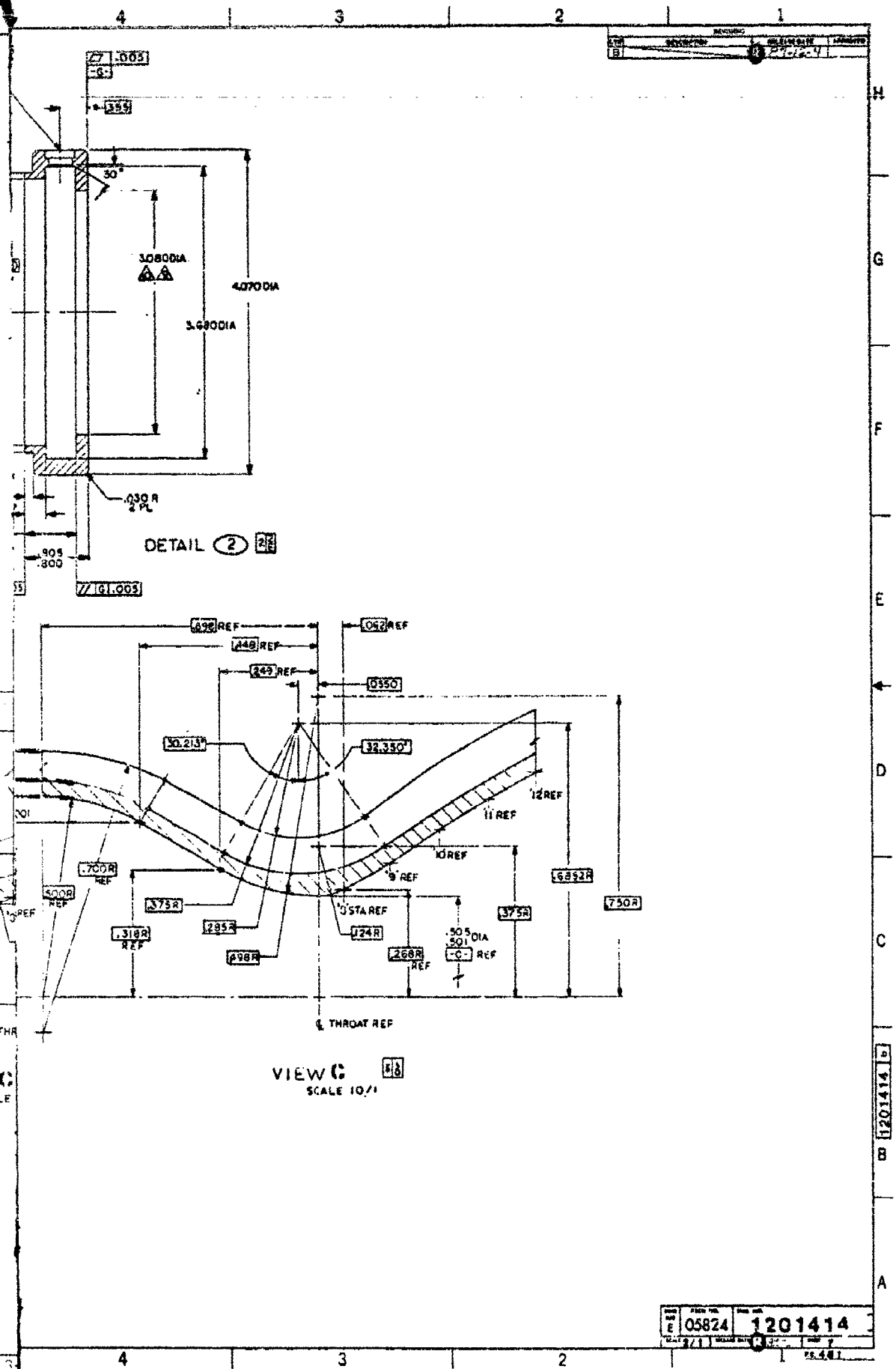
.005
-C-
.355
30°
3.0800DIA
4.0700DIA
3.6800DIA
.030 R
2 PL
.905
.800
G1.005
DETAIL 2
.896 REF
.052 REF
.248 REF
.249 REF
.0550
30.213°
32.350°
12 REF
11 REF
10 REF
9 REF
0 STA REF
.700R REF
.500R REF
.375R
.318R REF
.295R
.298R
.224R
.268R REF
.505 .501 DIA
-C- REF
.375R
.6352R
.750R
℄ THROAT REF
VIEW C
SCALE 10/1
1201414
05824
1201414

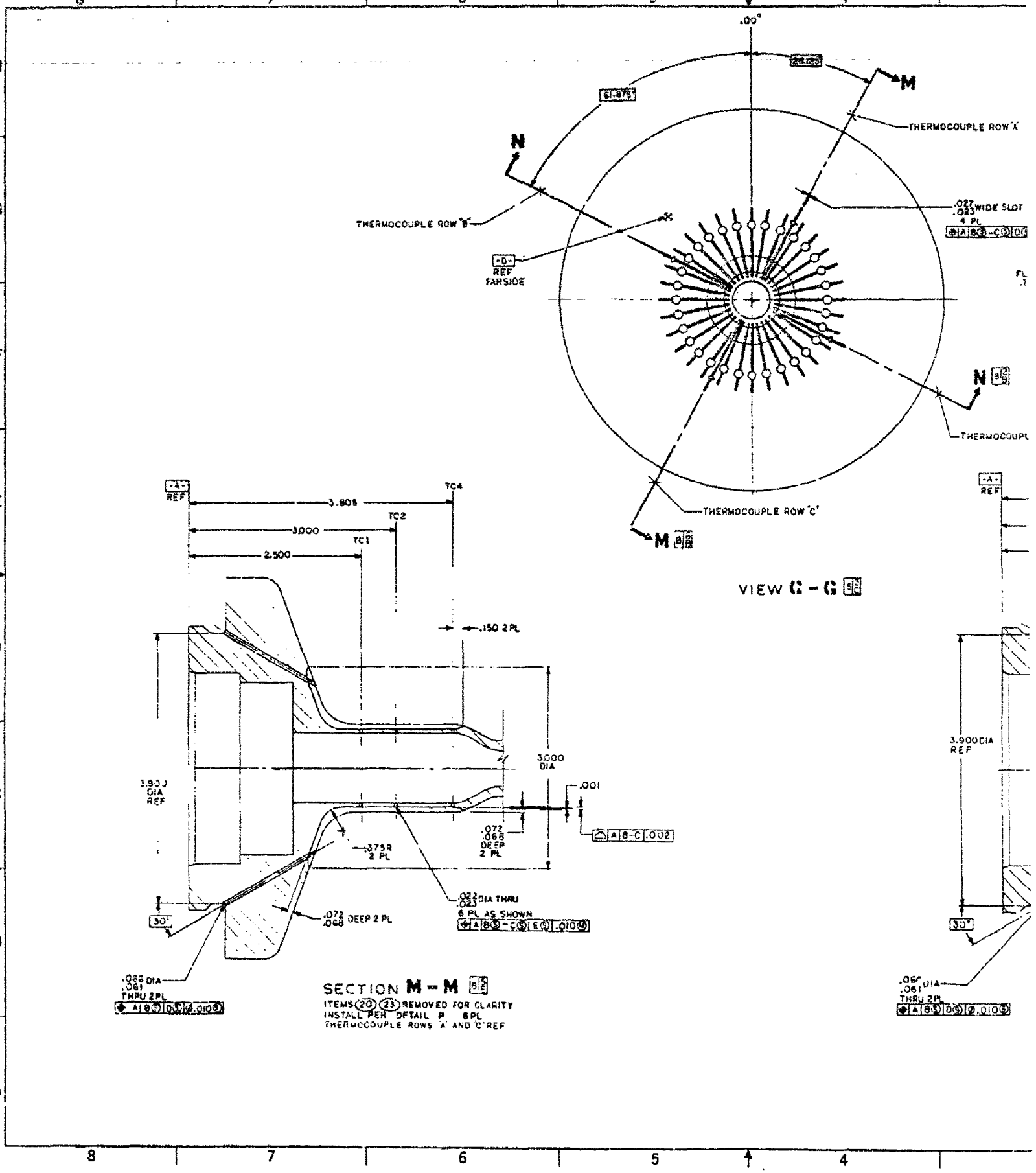
.00°
61.875°
M
N
THERMOCOUPLE ROW 'A'
THERMOCOUPLE ROW 'B'
.027
.023 WIDE SLOT
4 PL
-D-
REF
FARSIDE
THERMOCOUPLE ROW 'C'
VIEW C - C
-A-
REF
3.805
3.000
2.500
TC4
TC2
TC1
.150 2PL
3.000
DIA
3.900
DIA
REF
.001
A B-C .002
.072
.068
DEEP
2 PL
.375R
2 PL
.022
.023 DIA THRU
6 PL AS SHOWN
A B D .010
.072
.068 DEEP 2 PL
30°
.066 DIA
.061
THRU 2PL
A B D .010
SECTION M - M
ITEMS 20 23 REMOVED FOR CLARITY
INSTALL PER DETAIL P 6PL
THERMOCOUPLE ROWS 'A' AND 'C' REF

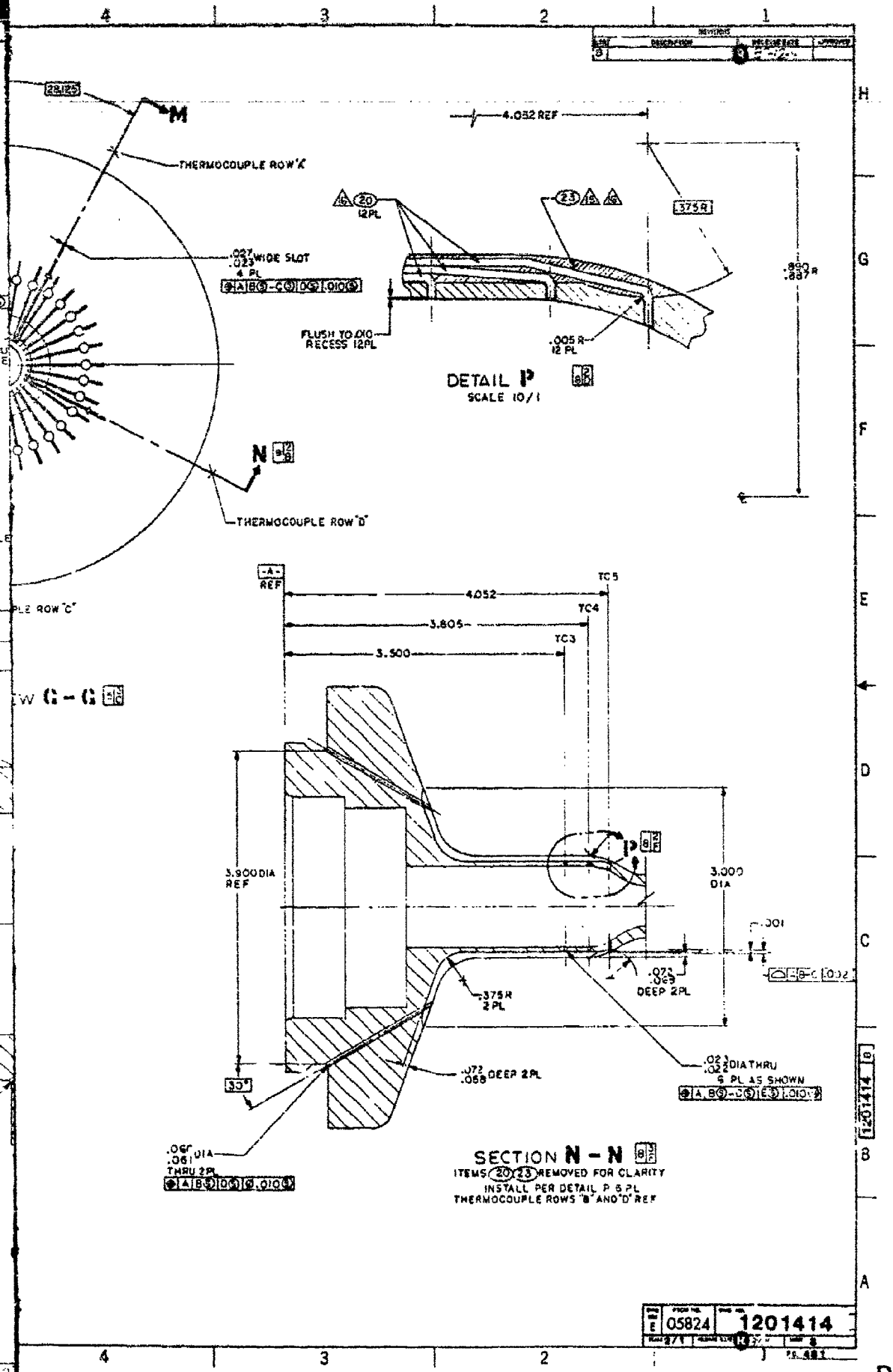
M
THERMOCOUPLE ROW "K"
4.052 REF
20
12PL
23
.375R
.027
.023 WIDE SLOT
4 PL
FLUSH TO .010
RECESS 12PL
.005 R
12 PL
.890
.887 R
DETAIL P
SCALE 10/1
N
THERMOCOUPLE ROW "D"
-A-
REF
4.052
TC5
TC4
3.805
TC3
3.500
3.900 DIA
REF
3.000
DIA
.001
.072
.069
DEEP 2PL
.375R
2 PL
.072
.069 DEEP 2PL
.021
.020 DIA THRU
6 PL AS SHOWN
30°
.061
.061 DIA
THRU 2PL
SECTION N - N
ITEMS 20 23 REMOVED FOR CLARITY
INSTALL PER DETAIL P 6 PL
THERMOCOUPLE ROWS "B" AND "D" REF
1201414
05824
1201414

NOTES:

1. INTERPRET DRAWING PER ATC-STD-1556.

2. PROTECTIVE CLOSURES ARE REQUIRED ON ALL PROPELLANT INLETS, INSTRUMENTATION PORTS, AND NOZZLE EXIT DURING HANDLING, SHIPPING AND STORAGE. REMOVE ONLY AS REQUIRED.

3. CONTAMINATION CRITICAL HARDWARE. COMPONENT CLEANLINESS REQUIREMENTS SHALL BE MAINTAINED THROUGHOUT ASSEMBLY PROCEDURE.

4. MILLIPORE FILTERS (FSCM NO. 06071) RATED AT 200 MICRONS ABSOLUTE, OR LOWER, SHALL BE USED WHEN FLUSHING ANY FLUIDS THROUGH THE HARDWARE.

5. APPLY A THIN FILM OF (21) LUBRICANT (MS-122) TO ALL SCREW THREADS PRIOR TO ASSEMBLY PER ATC-STD-4052.

6. TORQUE VALUES ARE TOTAL. TORQUE INFORMATION PER ATC-STD-4039.

7. TORQUE SEQUENCE FOR A GIVEN BOLT PATTERN SHALL BE PER ASO 5226.

8. REFERENCED INSTRUMENTATION TYPE AND LOCATION IS DEFINED ON DRAWINGS FOR (1) CHAMBER AND (2) INJECTOR. ADDITIONAL THERMOCOUPLE INSTRUMENTATION TO BE ADDED TO (1) PER COGNIZANT ENGINEER.

9. REQUIRED FLOW BALANCING WASHERS (DRAWING 1301920) SHALL BE SELECTED AND RECORDED BY THE COGNIZANT ENGINEER SUBSEQUENT TO COLD FLOW CALIBRATION TESTS PER DRAWING 1201919, NOTE 10.

10. PROOF AND LEAK TESTS: THE THRUST CHAMBER ASSEMBLY SHALL BE SUBJECTED TO PROOF AND LEAK TESTS AS FOLLOWS:

    A. PROOF TEST - USING CLEAN DRY GN_2, PRESSURIZE THE THRUST CHAMBER ASSEMBLY USING A SUITABLE THROAT PLUG TO 225 ± 25 PSIG FOR 5 MINUTES MINIMUM.

    B. LEAK TEST - USING CLEAN DRY GN_2, PRESSURIZE THE THRUST CHAMBER ASSEMBLY TO 125 ± 10 PSIG FOR 5 MINUTES MINIMUM. THERE SHALL BE NO EVIDENCE OF LEAKAGE GREATER THAN 1×10^{-5} SCCS ALLOWED.

11. MARK PER ASMR-35C WITH 1201915, APPLICABLE DASH NO. AND AEROJET TECHSYSTEMS COMPANY (ATC) ASSIGNED SERIAL NO.

DEVELOPMENT HARDWARE
FOR TEST OR EXPERIMENTATION

CHG	REVISION	REVISED BY	APPROVED
A1	SEE A DCN	R 7-9-15	

	AR			LUBE	ATC-44159	21
	1	93758	402-2103	THERMO-COUPLE	TYPE BB ASSY GROUNDED JUNCTION	20
						19
						18
	1	05939	480240890	SEAL ASSY		17
	1		AS5304OE1-904	O-RING		16
	1		AS5304OE1-904	O-RING		15
	1		AN924-8S	NUT, BULKHEAD		14
	1		AN815-4S	UNION		13
	14		NAS 620 C10L	WASHER, FLAT		12
	5		NAS 1351 N3-24	SCREW, CAP		11
	8		NAS 1351 N3-20	SCREW, CAP		10
						9
	1		1201424-2	RING		8
	1		1201424-1	THRUST PLATE		7
	2		1201423-1	VALVE, PROPELLANT		6
	1		1201422-9	IGNITER, SPARK		5
	1		9	WASHER, FLOW BALANCE	(1201420)	4
	1		1201419-1	SLEEVE, IGNITER		3
	1		1201418-1	INJECTOR ASSY		2
	1		1201414-9	CHAMBER ASSY		1
	LTR	PREV NO.	PART OR IDENTIFYING NO.	NOMENCLATURE OR DESCRIPTION	MATERIAL SPECIFICATION	ITEM NO.

1201416 A

NAS 3-24388

A. GRAY

TechSystems

THRUST CHAMBER ASSEMBLY

E 05824 1201415

2/1 R 1 OF 3

DO NOT SCALE DRAWING

DEVELOPMENT HARDWARE
FOR TEST OR EXPERIMENTATION

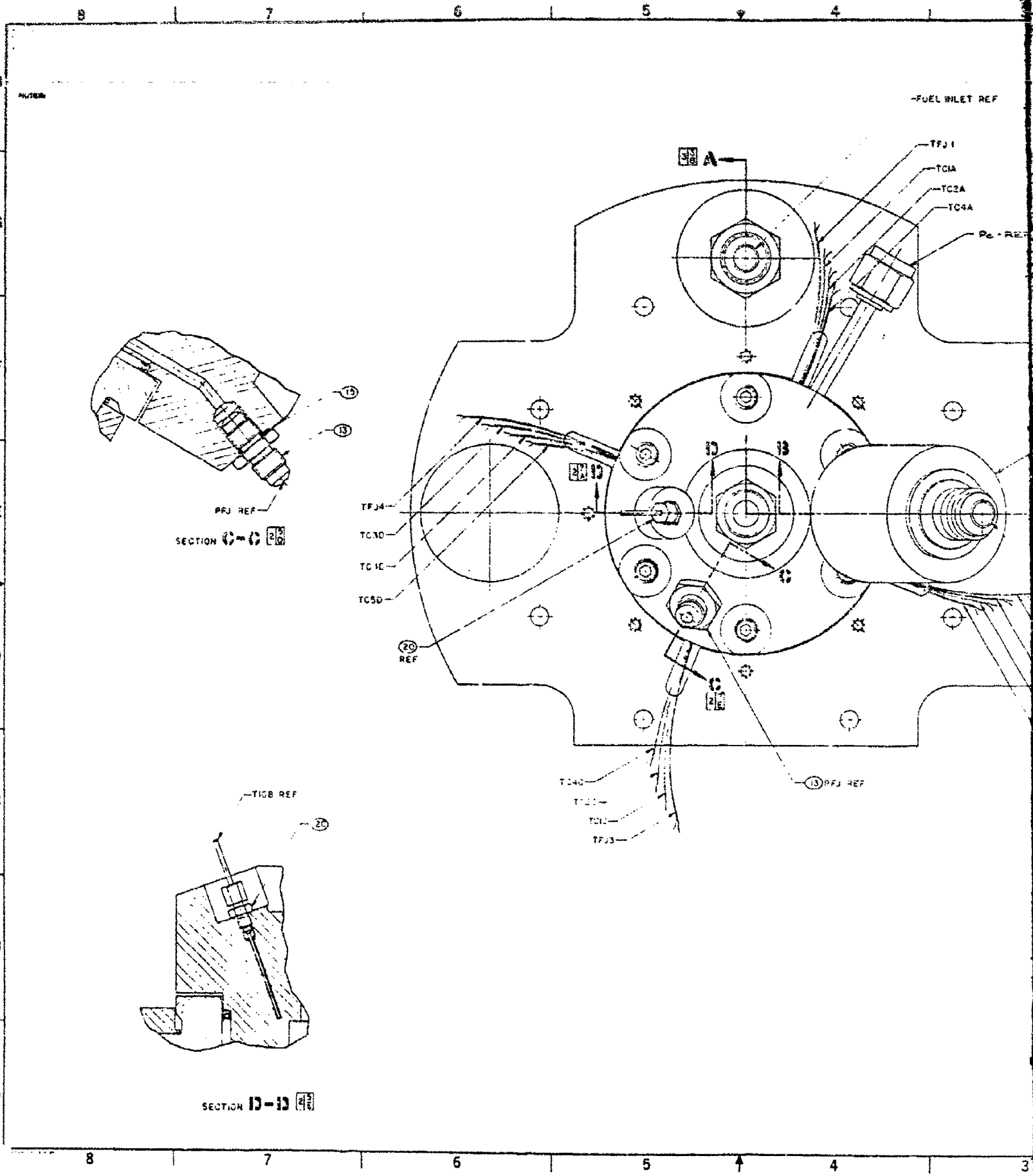
FUEL INLET REF
A
TFJ 1
TC1A
TC2A
TC4A
Pe - REF
15
13
PFJ REF
SECTION C-C
TFJ4
TC3D
TC1D
TC5D
20
REF
B
B
C
C
TFJ3
PFJ REF
TIGB REF
20
SECTION B-B

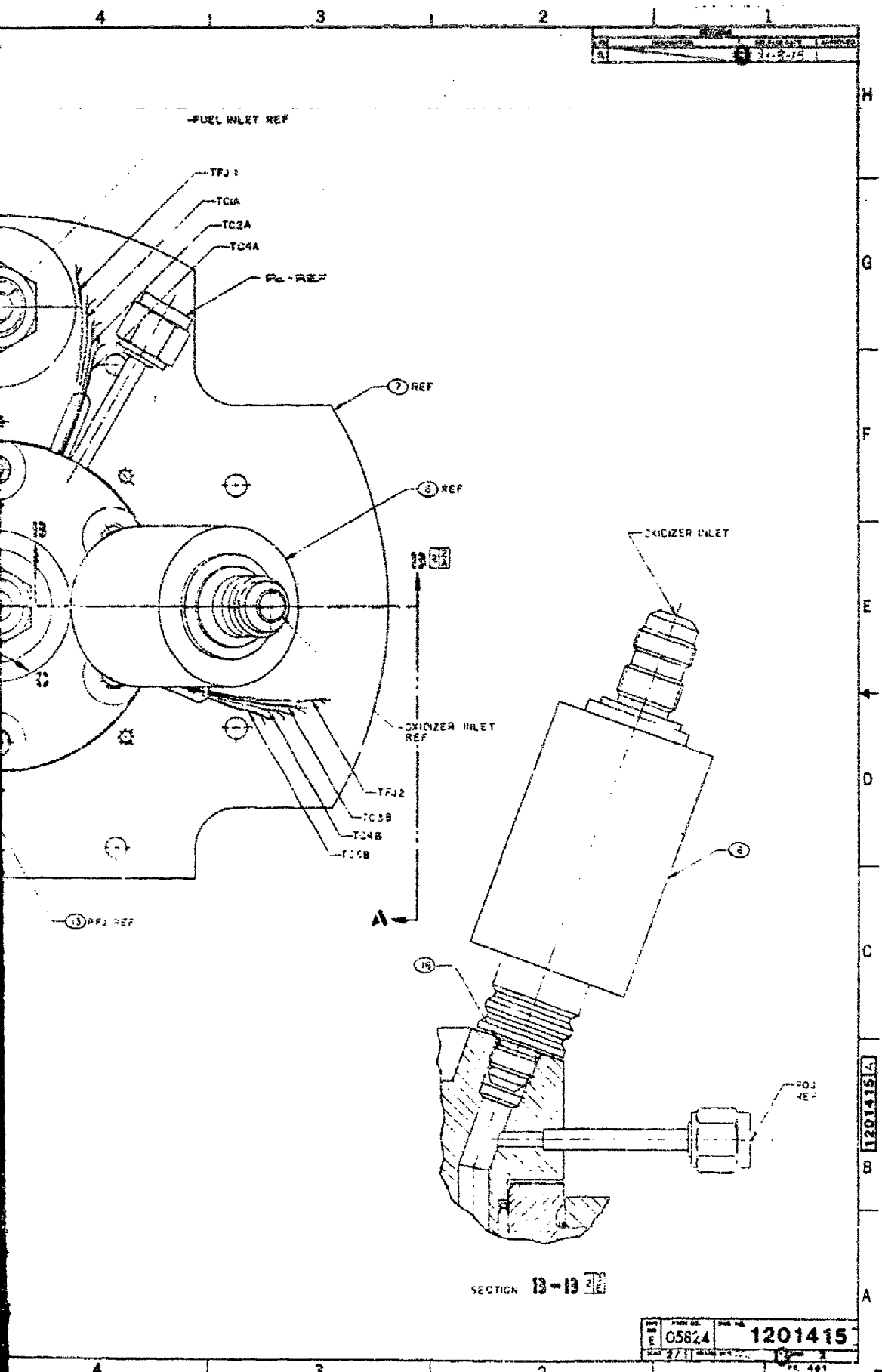
FUEL INLET REF
TFJ 1
TC1A
TC2A
TC4A
REF
REF
REF
OXIDIZER INLET
OXIDIZER INLET REF
TFJ2
TC3B
TC4B
TC5B
PFJ REF
A
SECTION 13-13
1201415
05824
1201415

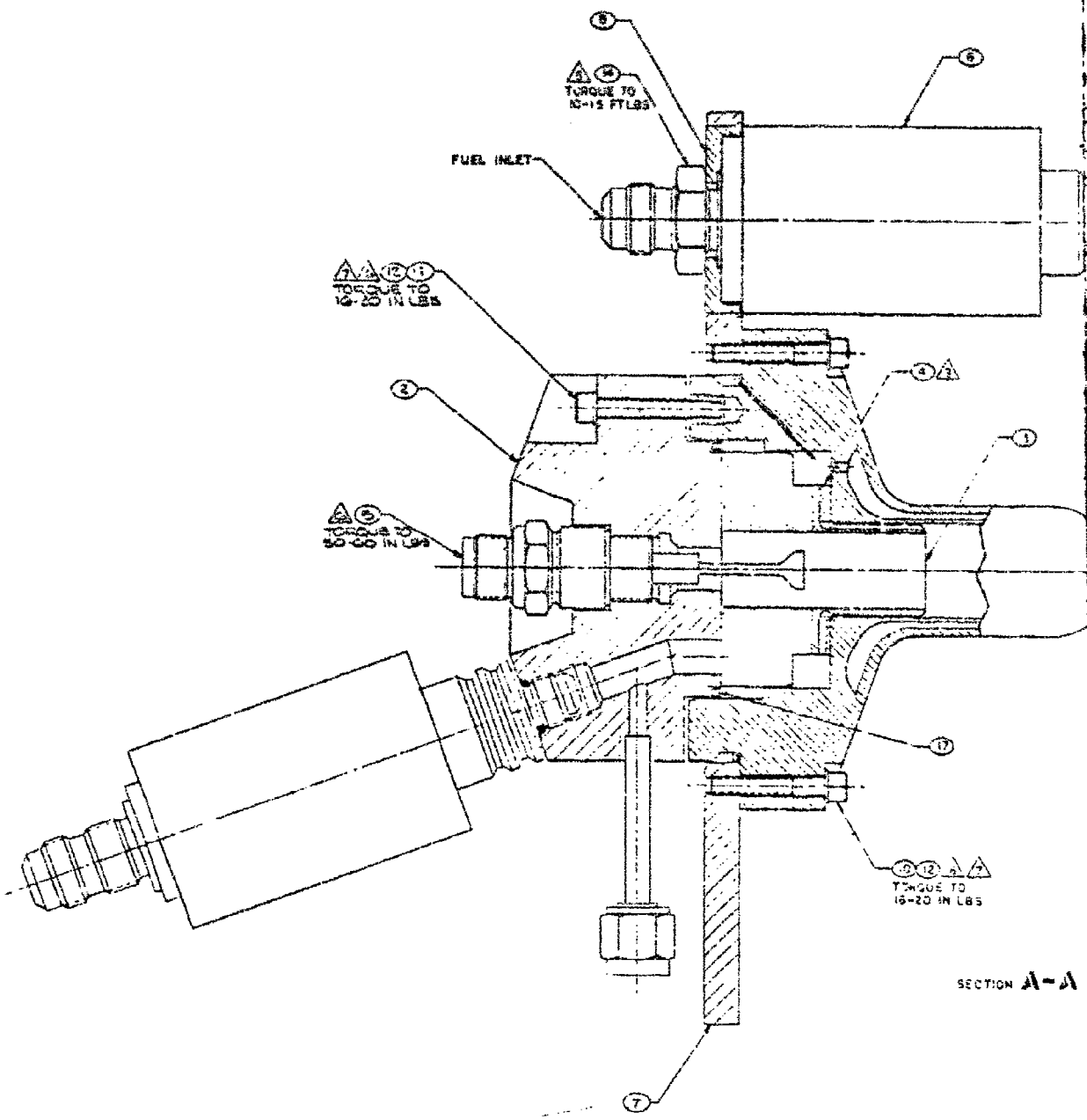
FUEL INLET
TORQUE TO 10-15 FT LBS
TORQUE TO 16-20 IN LBS
TORQUE TO 50-60 IN LBS
TORQUE TO 16-20 IN LBS
SECTION A-A

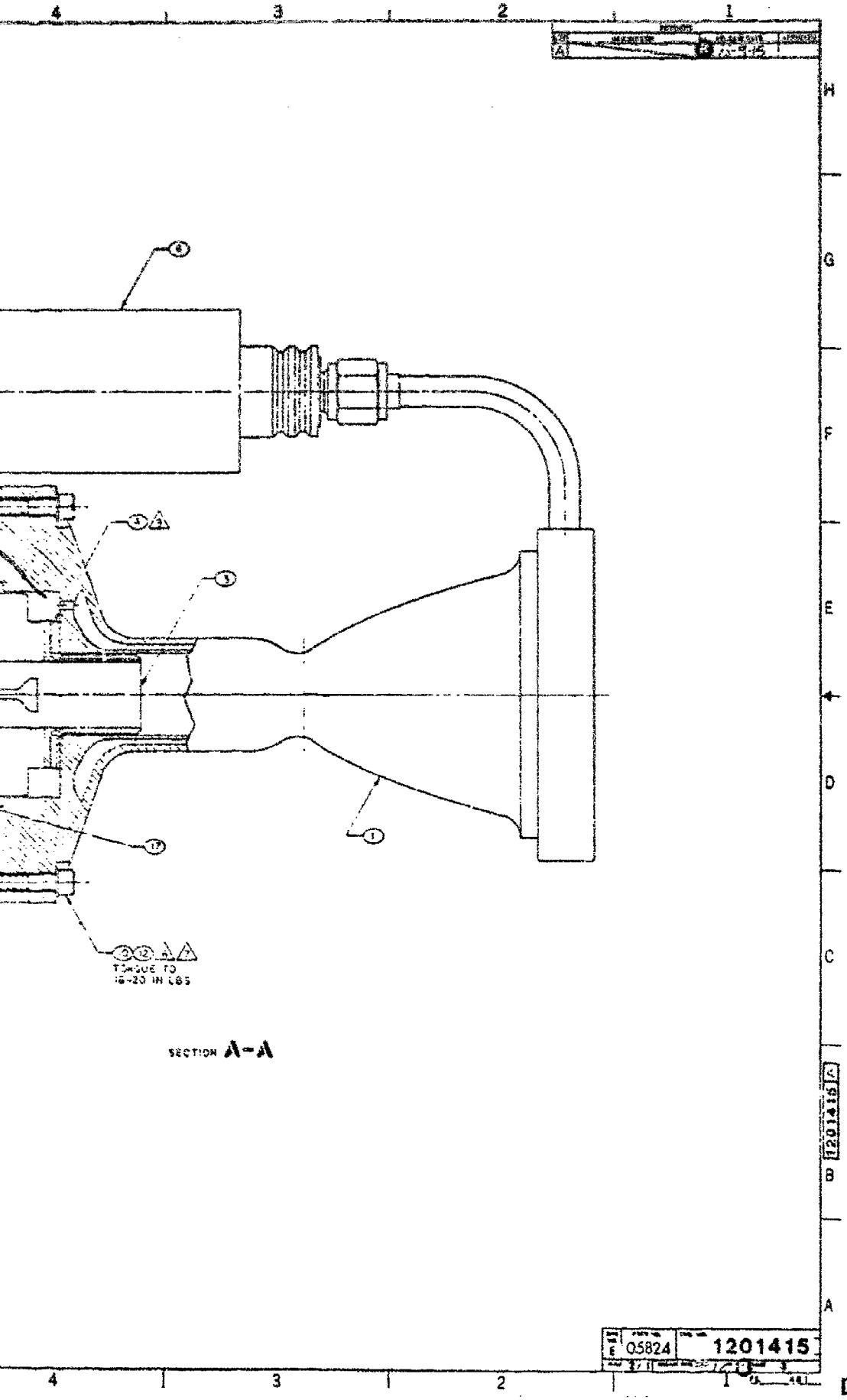
TORQUE TO
16-20 IN LBS
SECTION A-A
05824
1201415

NOTES:

1. INTERPRET DRAWING PER ATC-STD-6620.
2. ALL DIMENSIONS ⊕ .005 Ⓢ A Ⓢ B Ⓢ C Ⓢ UNLESS OTHERWISE NOTED.
3. MARK PER A3478-7, WITH INFORMATION SHOWN. SEAL INLET PORTS AS SHOWN.
4. MARK PER M2476-57 WITH 1301457 AND APPLICABLE BASE NUMBER.
5. PENETRANT INSPECT MACHINED SURFACES PER ATC-STD-6042, TYPE I, METHOD B. ACCEPTANCE CRITERIA PER ATC-STD-6008, CLASS II, UNLESS OTHERWISE NOTED.

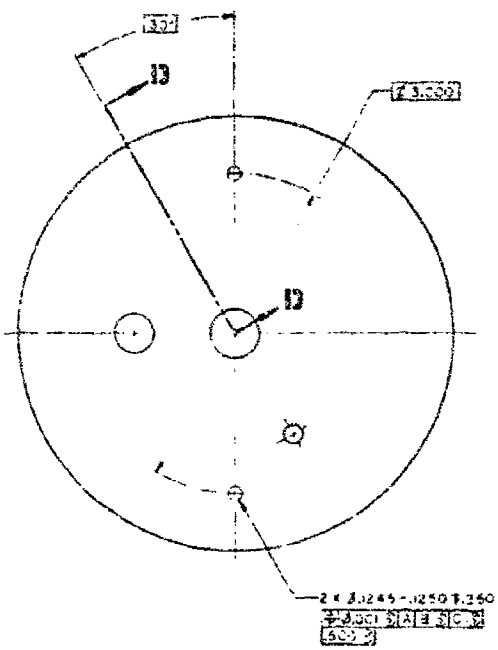

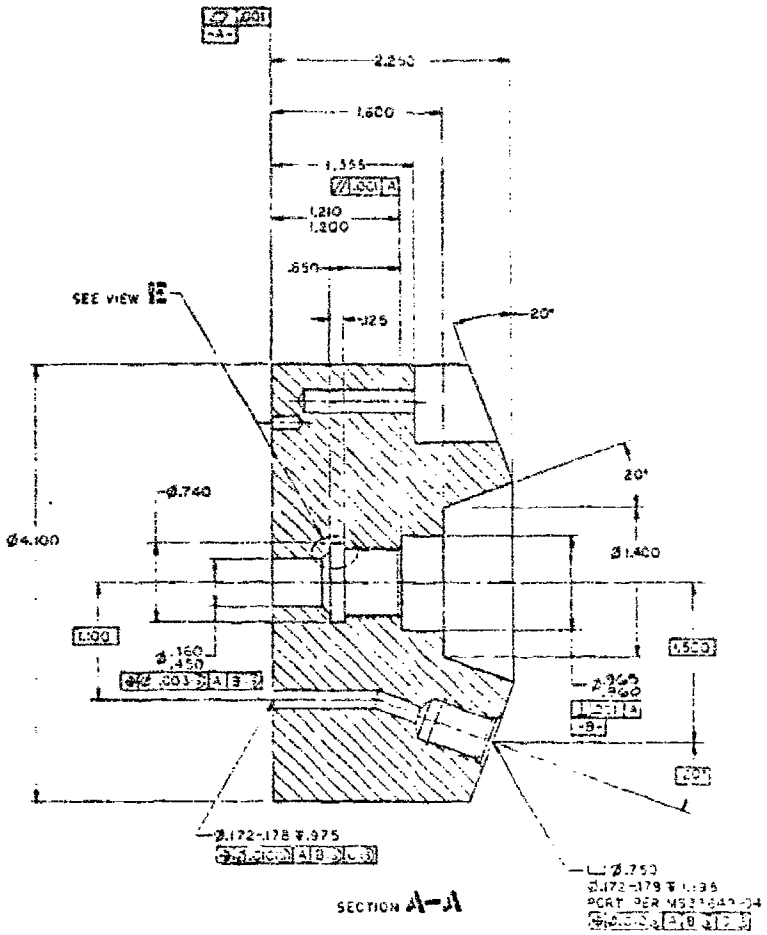

SECTION A-A

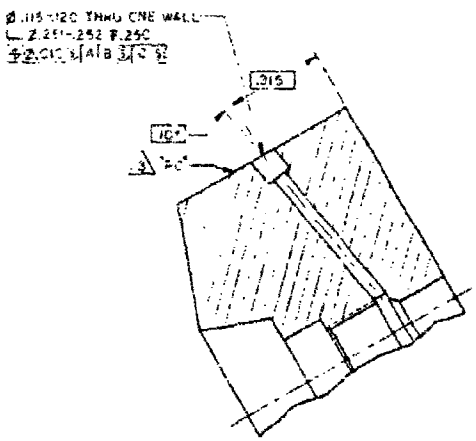

SECTION D-D

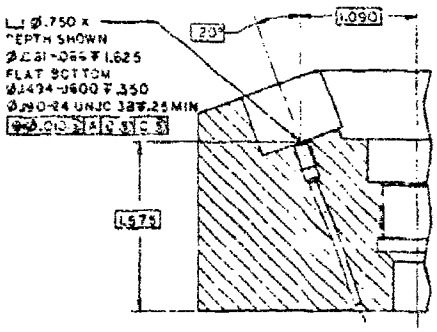

SECTION B-B

DEVELOPMENT HARDWARE
FOR TEST OR EXPERIMENTATION

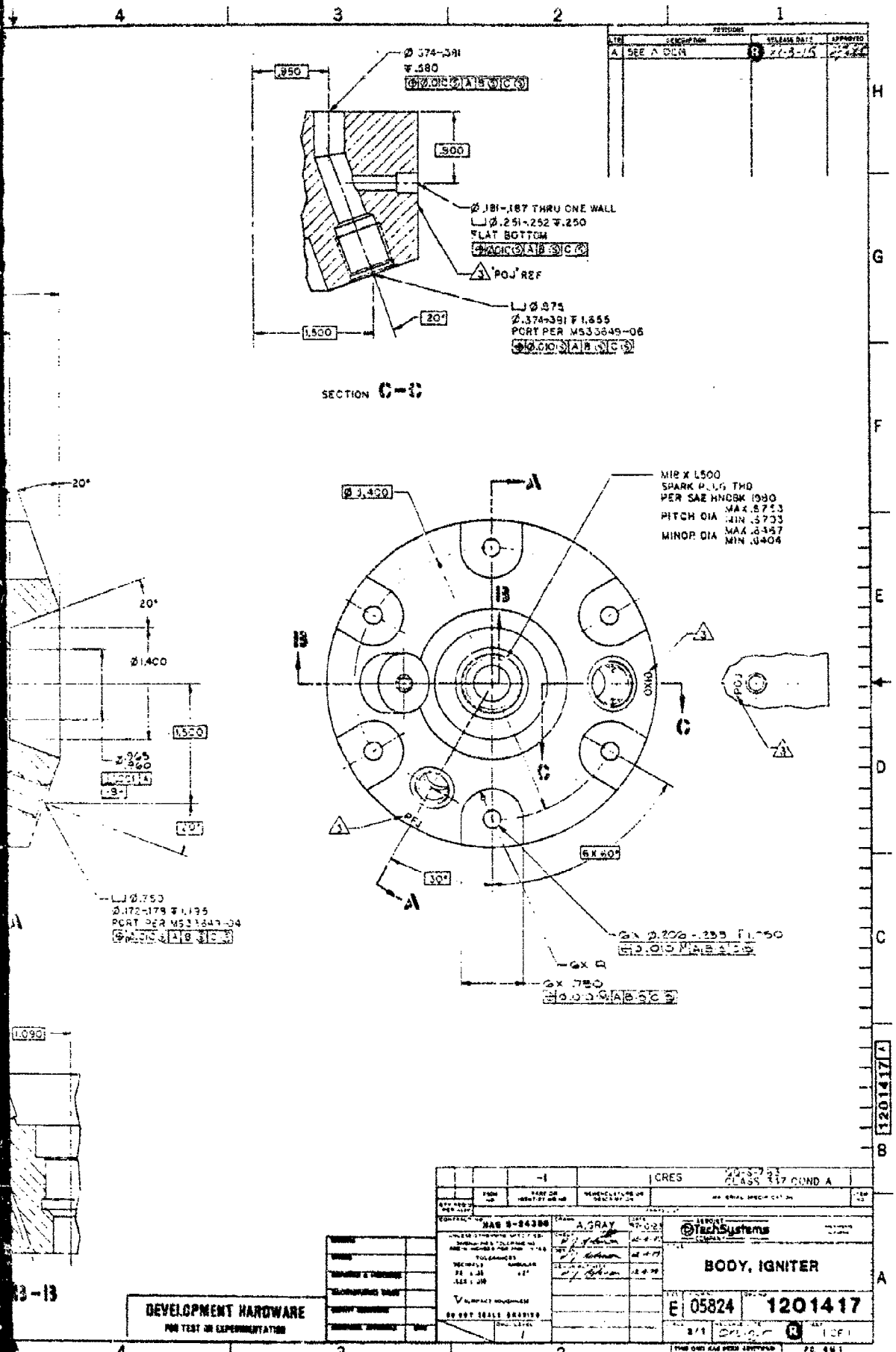
SEE A DWG
Ø .374-.391 ↧ .580
.950
.900
Ø .181-.187 THRU ONE WALL
Ø .251-.252 ↧ .250
FLAT BOTTOM
'POJ' REF
Ø .875
Ø .374-.391 ↧ 1.655
PORT PER MS33649-06
20°
1.500
SECTION C-C
20°
Ø 1.400
1.500
Ø .965
.960
1.090
Ø .750
Ø .172-.179 ↧ 1.195
PORT PER MS33649-04
Ø 3.400
MIR X 1.500
SPARK PLUG THD
PER SAE HNDBK 1980
PITCH DIA MAX .8753 MIN .8703
MINOR DIA MAX .8457 MIN .8404
B
A
C
PEI
6X 60°
30°
6X Ø .206-.235 ↧ 1.750
6X R
6X .750
1201417
-1
CRES
AISI 431
CLASS 337 COND A
NAS 9-24380
A. GRAY
TechSystems
BODY, IGNITER
E 05824
1201417
1 OF 1
DEVELOPMENT HARDWARE
FOR TEST OR EXPERIMENTATION
B-B

NOTES:

1. INTERPRET DRAWING PER ATC-STD-6026.
2. DRY HYDROGEN OR VACUUM BRAZE PER COGNIZANT ENGINEER. USING (24) POWDER.
3. ALL DIAMETERS ⌀0.010 Ⓢ A Ⓜ UNLESS OTHERWISE NOTED.
4. CONTAMINATION CRITICAL HARDWARE. CLEANLINESS PER ATC-46358, LEVEL E, EXCEPT PARTICLE SIZE AND NVR LIMITS PER ATC-STD-4940, LEVEL 4000 INTERNAL, AND LEVEL VC EXTERNAL. SSA IS 1.0 SQ FT. NOTE: LOX CLEANING PER ATC-46358 TO BE PERFORMED SUBSEQUENT TO FLOW CALIBRATION TESTS OF NOTE 14.
5. PROTECTIVE CLOSURES ARE REQUIRED TO PROTECT INTERNAL PASSAGES DURING HANDLING, SHIPPING AND STORAGE. REMOVE ONLY AS REQUIRED.
6. ALL DIMENSIONS APPLY AFTER BRAZING, UNLESS OTHERWISE INDICATED.
7. FINAL MACHINE AFTER PROOF AND LEAK TESTING PER NOTE 8.
8. PROOF AND LEAK TESTS: THE INTERNAL IGNITER INJECTOR ASSEMBLY SHALL BE SUBJECTED TO PROOF AND LEAK TESTS, PRIOR TO FINAL M CHINING PER NOTE 7, AS FOLLOWS:
   A. PROOF TEST: USING CLEAN, DRY GN_2, SIMULTANEOUSLY PRESSURIZE THE FUEL AND OXIDIZER CIRCUITS TO 110 ± 10 PSIG FOR 3 MINUTES MINIMUM. THERE SHALL BE NO EVIDENCE OF PERMANENT DEFORMATION OR FAILURE.
   B. EXTERNAL LEAK TEST: USING CLEAN, DRY GN_2, SIMULTANEOUSLY PRESSURIZE THE FUEL AND OXIDIZER CIRCUITS TO 50 ± 5 PSIG FOR 5 MINUTES MINIMUM. THERE SHALL BE NO LEAKAGE GREATER THAN 1 x 10-3 SCCS ALLOWED.
9. USE AS9390-328, 2 PLACES, FOR ALIGNING AND BRAZING DIFFUSION BONDED PLATELET STACK TO IGNITER BODY (20) PER NOTE 2. REMOVE AFTER BRAZING OR BURN-IN FINAL MACHINING.
10. ALTER AS SHOWN.
11. NICKEL STRIKE PLATELETS, USING (23), STACK PLATELETS PER STACKING SEQUENCE (VIEW A AND TABLE), AND DIFFUSION BOND PLATELET STACK ASSEMBLY PER COGNIZANT ENGINEER.
12. DRY HYDROGEN OR VACUUM BRAZE DIFFUSION BONDED PLATELET STACK ASSEMBLY (5) OF NOTE 11 TO IGNITER BODY (20), USING (21) POWDER.
13. MIX PARTS "A" AND "B" OF (23) PER MANUFACTURER'S INSTRUCTIONS TO OBTAIN PROPER ELECTROLESS NICKEL SOLUTION. MANUFACTURER IS ANCHEM LABS, INC., 2250-T BLANWICK, COMPTON, CA 90220.
14. FLOW CALIBRATION TEST: EACH CIRCUIT OF THE INTERNAL IGNITER INJECTOR ASSEMBLY SHALL BE FLOW TESTED AS FOLLOWS:
   A. FUEL CIRCUIT: USING CLEAN, DRY GN_2, P/N 1201429-9, P/N 1201429-1 THRU -16, ROTAMETER, P/N1201421-3, FLOW TO ATMOSPHERIC PRESSURE AT INLET PRESSURES RANGING FROM 1.0 TO 15.0 PSIG, USING 1.0 PSIG INCREMENTS. FOR EACH DATA POINT, RECORD THE INLET PRESSURE, MANIFOLD PRESSURE, GN_2 FLOW RATE, NOMINAL GN_2 FLOW TEMPERATURE, AND GN_2 DEW POINT. SPLIT FOR P/N 1201429-1 THRU -16.
   B. OXIDIZER CIRCUIT: USING CLEAN, DRY GN_2, FLOW TO ATMOSPHERIC PRESSURE AT INLET PRESSURE RANGING FROM 1.0 TO 15.0 PSIG, USING 1.0 PSIG INCREMENTS. FOR EACH DATA POINT, RECORD THE INLET PRESSURE, GN_2 FLOW RATE, AND NOMINAL GN_2 FLOW TEMPERATURE.
15. MILLIPORE FILTERS RATED AT 400 MICRONS ABSOLUTE, OR LOWER, SHALL BE USED WHEN FLOWING ANY FLUID THROUGH THE INTERNAL IGNITER INJECTOR ASSEMBLY.
16. MARK PER AS9278-7 WITH 1201418, APPLICABLE DASH NO. AND AEROJET TECHNOSYSTEMS COMPANY (ATC) ASSIGNED SERIAL NO.

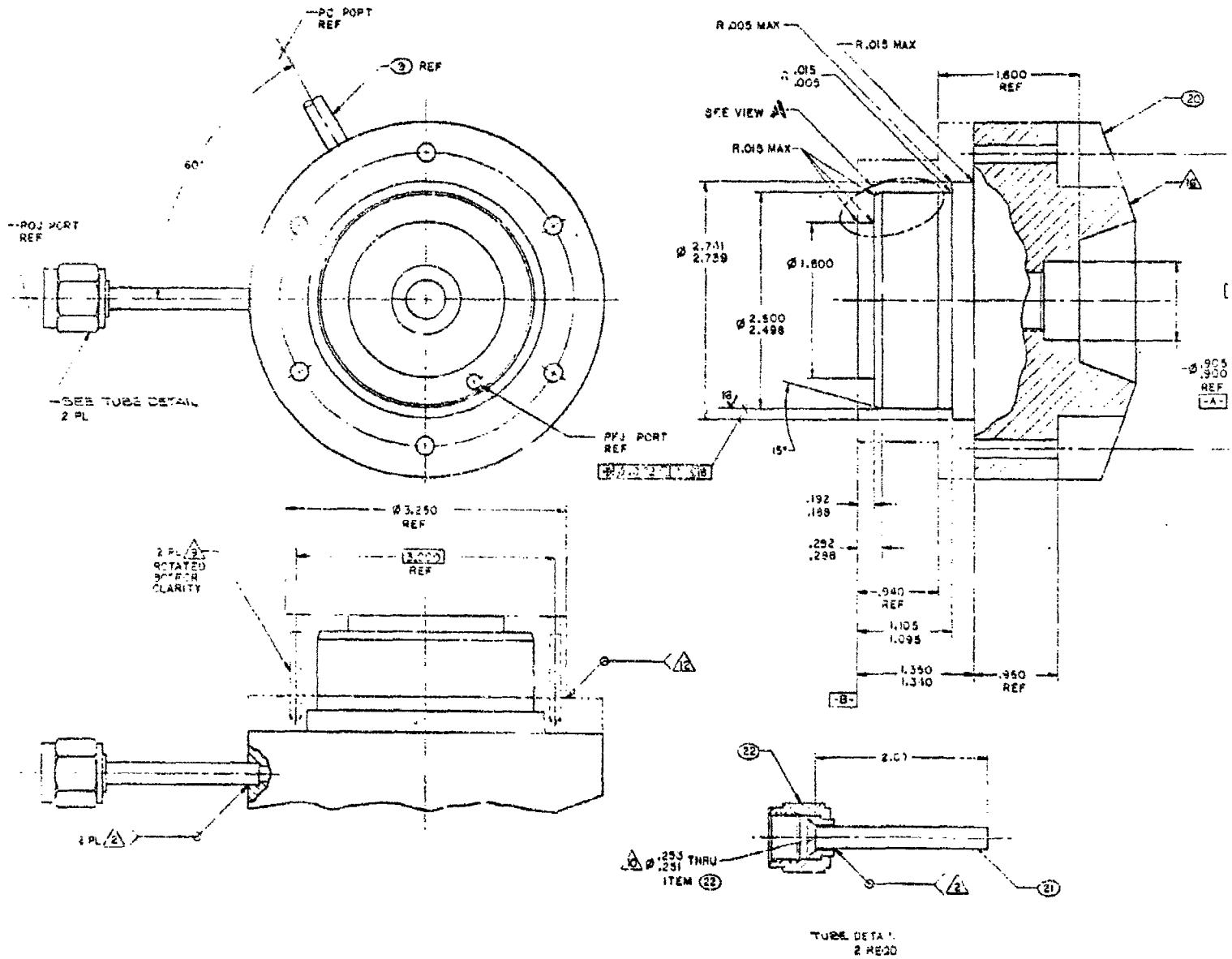

DEVELOPMENT HARDWARE
FOR TEST OR EXPERIMENTATION

TEST: EACH CIRCUIT OF THE INTEGRAL ASSEMBLY SHALL BE FLOW TESTED AS

THE CLEAN, DRY GH_2, PER 1201415-9, PAR
GAS. ROTOMETER, P/N 1201421-1, FLOW TO ATMOSPHERIC
PRESSURES RANGING FROM 1.0 TO 15.00 PSIG.
INCREMENTS. FOR EACH DATA POINT, RECORD THE
MANIFOLD PRESSURE, GH_2 FLOW RATE, NORMAL GH_2
AND GH_2 FLOW SPLIT FOR P/N 1201420-1 THRU

CUIT: USING CLEAN, DRY GH_2, FLOW TO
PRESSURE AT INLET PRESSURE RANGING
5.0 PSIG, USING 1.0 PSIG INCREMENTS.
A POINT, RECORD THE INLET PRESSURE,
E, AND NORMAL GH_2 FLOW TEMPERATURE.

IS RATED AT 400 MICRONS ABSOLUTE.
BE USED WHEN FLUSHING ANY FLUIDIC
GRAL IGNITER INJECTOR ASSEMBLY.

WITH 1201416, APPLICABLE DASH NO.
INSYSTEMS COMPANY (ATCO) ASSEMBLY

REV	DESCRIPTION	DATE	APPROVED
A	SEE A DCN	11-3-75	

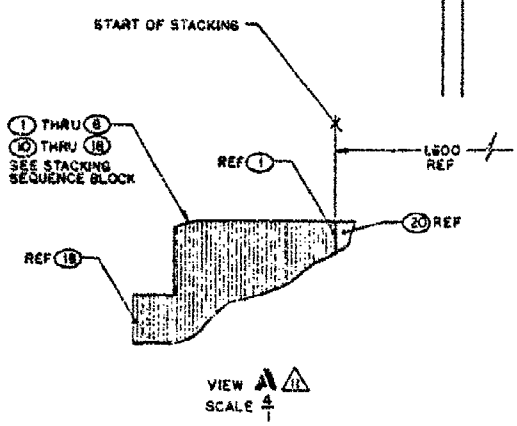

STACKING SEQUENCE	
ITEM NO.	QTY REQD
1	16
2	
3	
4	
5	
6	
7	
8	
9	
10	
11	
12	8
13	5
14	
15	
16	
17	
18	2

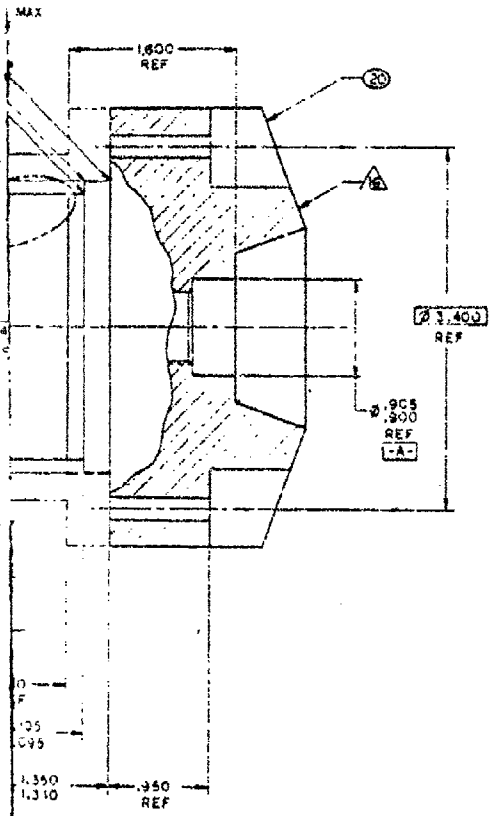

12 2	AR			BRAZE ALLOY	FOIL .001 THK AND .020 DIA WIRE PER AMS-4787	24
13 11	AR			BRAZE ALLOY	AMERICAN LABS NO. 24 ELECTROLESS NICKEL	23
	2		-22	CAP ASSY	ALTER FROM AN929-6S	22
	2		-21	TUBE	.250 O.D. x .035 WALL TUBING CRES 347 PER AMS5556 TYPE I	21
12 5			1201417-1	BODY IGNITER		20
						19
	2	1201416-18		PLATELET	BOTTOM	18
	3		-17		GH_2 INJECTION	17
	1		-16		GH_2 INNER MANF	16
	2		-15		GH_2 FILTER	15
	3		-14		GH_2 SPACER	14
	3		-13		SEPARATOR	13
	4		-12		GO_2 INJECTION	12
	1		-11		GO_2 INNER MANF	11
	1	1201416-10		PLATELET	GO_2 INNER MANF	10
	1		-9	PLATELET ASSY		9
	4	1201416-8		PLATELET	GO_2 SPACER	8
	4		-7		GO_2 FILTER	7
	5		-6		GO_2 SPACER	6
	4		-5		GO_2 FILTER	5
	1		-4		GO_2 REINFORCING	4
	1		-3		GO_2 METERING	3
	10		-2		GO_2 DISTRIBUTION	2
	1	1201416-1		PLATELET	GO_2 INLET	1
REQD	FROM	PART OR IDENTIFYING NO.	NOMENCLATURE OR DESCRIPTION		MATERIAL SPECIFICATION	ITEM NO.

1201418

NAS 3-24343-9

A. GRAY

DO NOT SCALE DRAWING

TechSystems

INTEGRAL IGNITER INJECTOR ASSEMBLY

E 05824 1201418

2/1 2/2/ 1 OF 1

DEVELOPMENT HARDWARE
FOR TEST OR EXPERIMENTATION

NOTES:

1. INTERPRET DRAWING PER ATC-STD-1026.
2. MATCH MACHINE DIAMETER TO MATING DIAMETER WITHIN .001 TO .002 DIAMETRICAL CLEARANCE FIT.
3. DRY HYDROGEN OR VACUUM BRAZE PER CONTRACT ENGINEER, USING (1) PRIOR TO FINAL MACHINING.
4. MARK PER A2470-37 WITH IDENTS AND APPLICABLE DASH NUMBER.

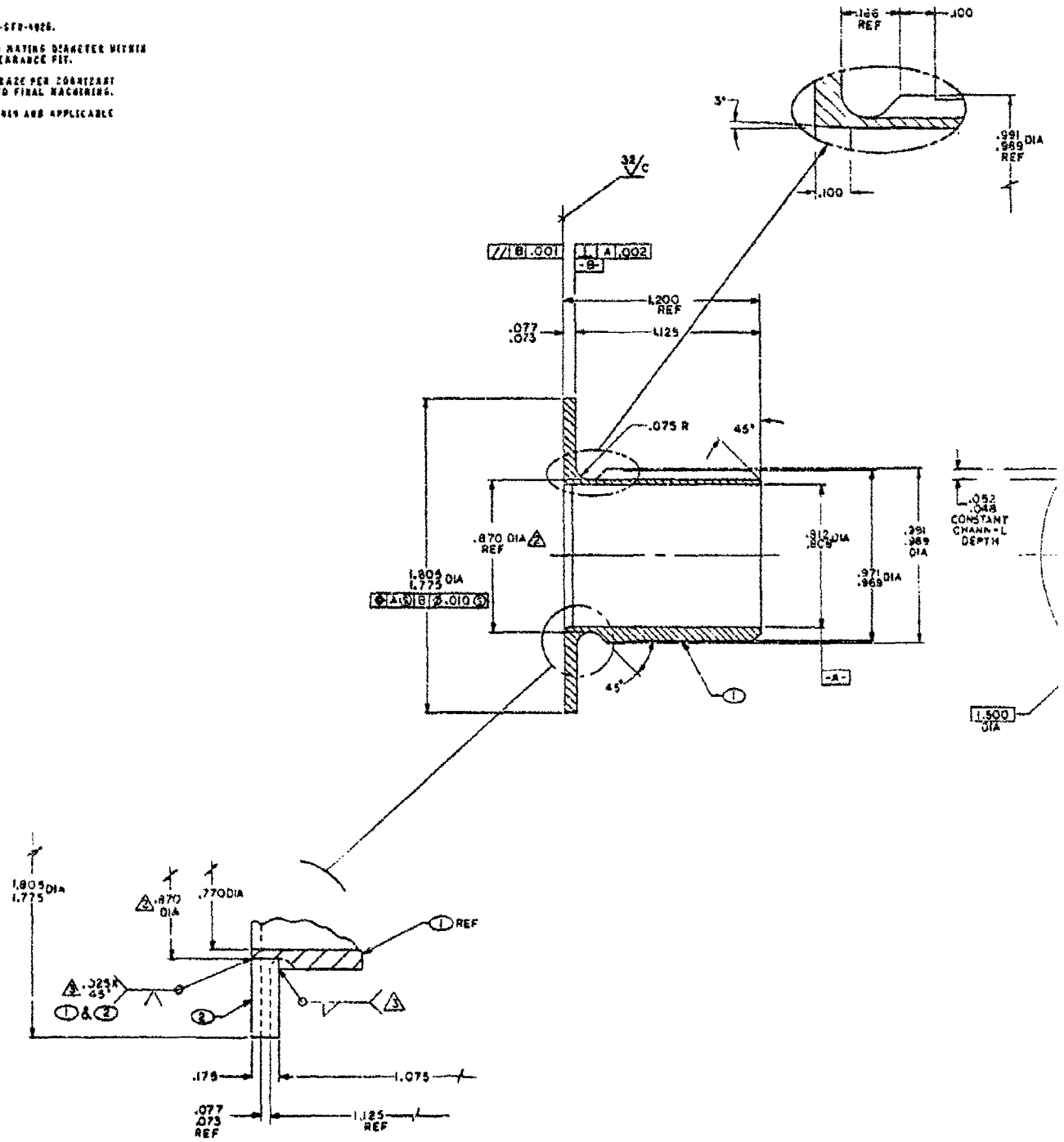

:BRAZE DETAIL
PRIOR TO MACHINING

DEVELOPME
FOR TEST OR

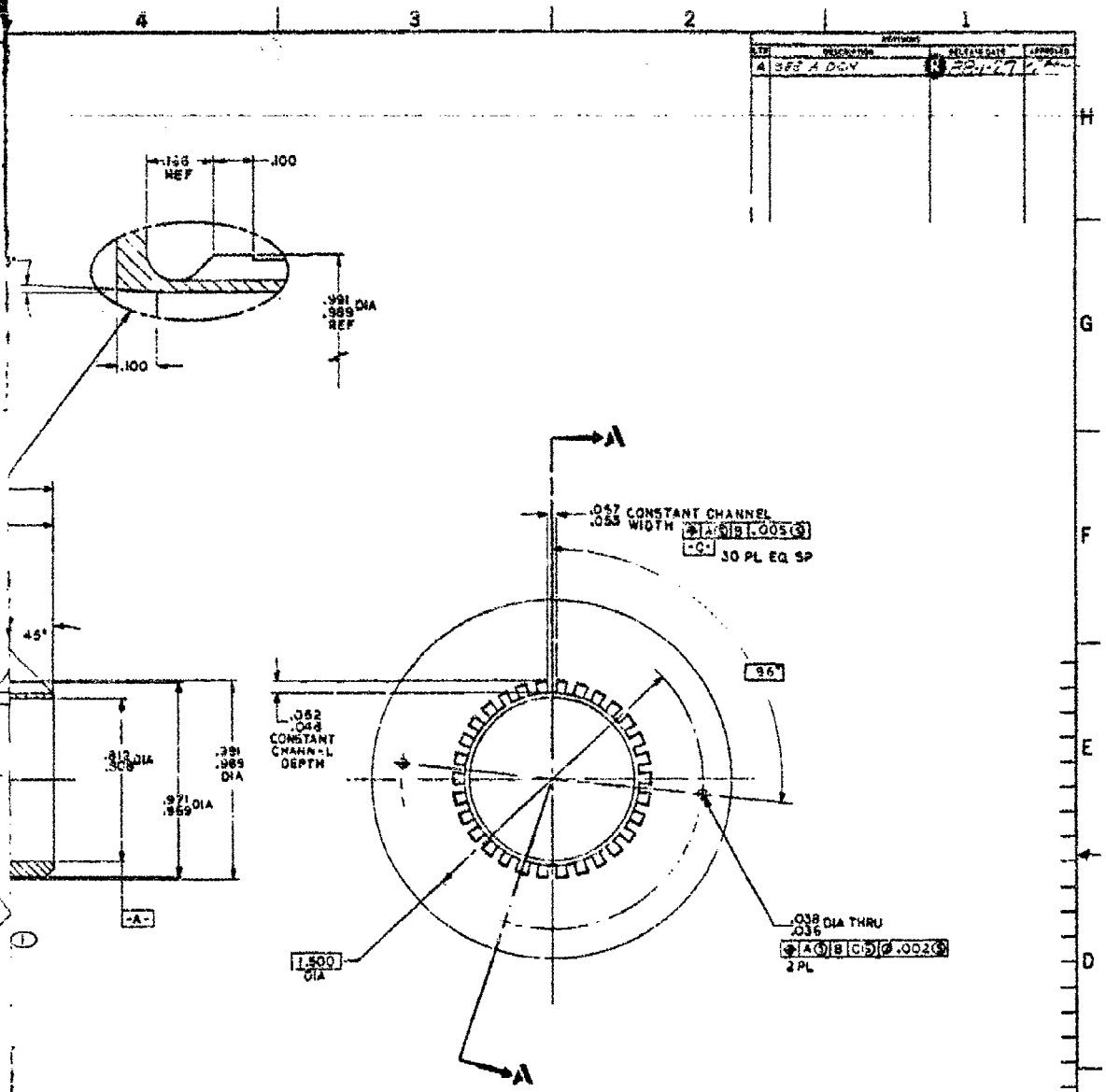

A/R			BRAZE FILLER MATERIAL	.030 DIA WIRE PER AMS 4777	3
1		-2	FLANGE	NICKEL UNS N02200 OR LOW-CARBON NICKEL UNS N02201 PER ASTM B-160	2
1		-1	BARREL		1

NAS 3-24380 — BASHNE — TechSystems

IGNITER SLEEVE ASSEMBLY

E 05824 1201419

4/1 — 1 OF 1

DEVELOPMENT HARDWARE
FOR TEST OR EXPERIMENTATION

1201419

NOTES:

1. INTERPRET DRAWING PER ATC-STD-1020.
2. CLEANLINESS PER ATC-STD-1060, LEVEL 500.
3. MARK PER AS472-37 WITH [illegible], APPLICABLE DASH NO. AND AEROJET TECHSYSTEMS COMPANY (ATC) ASSIGNED SERIAL NO.

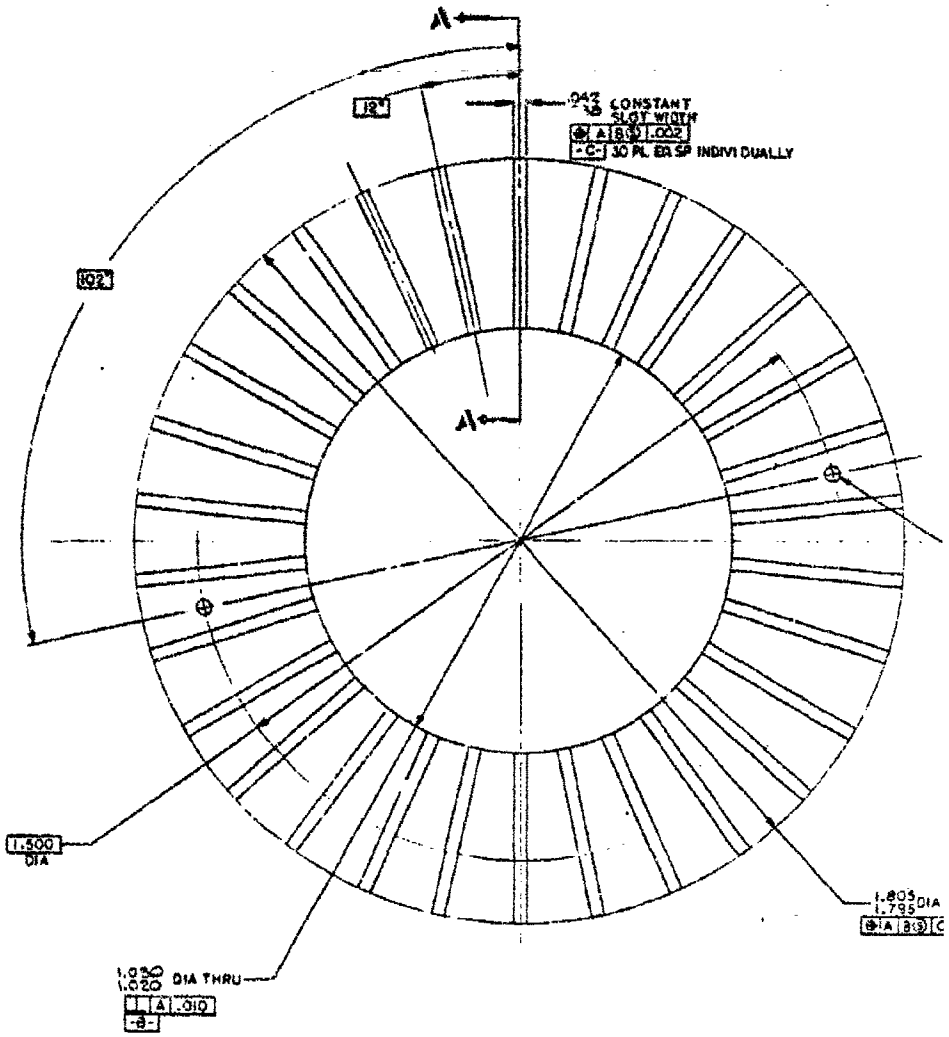

-16	.085
-15	.071
-14	.060
-13	.052
-12	.048
-11	.044
-10	.040
-9	.036
-7	.034
-6	.032
-5	.028
-4	.026
-3	.024
-2	.022
-1	.000
DASH NO	D SLOT DEPTH ±.0020

DEVELOPMEN

FOR TEST OR EX

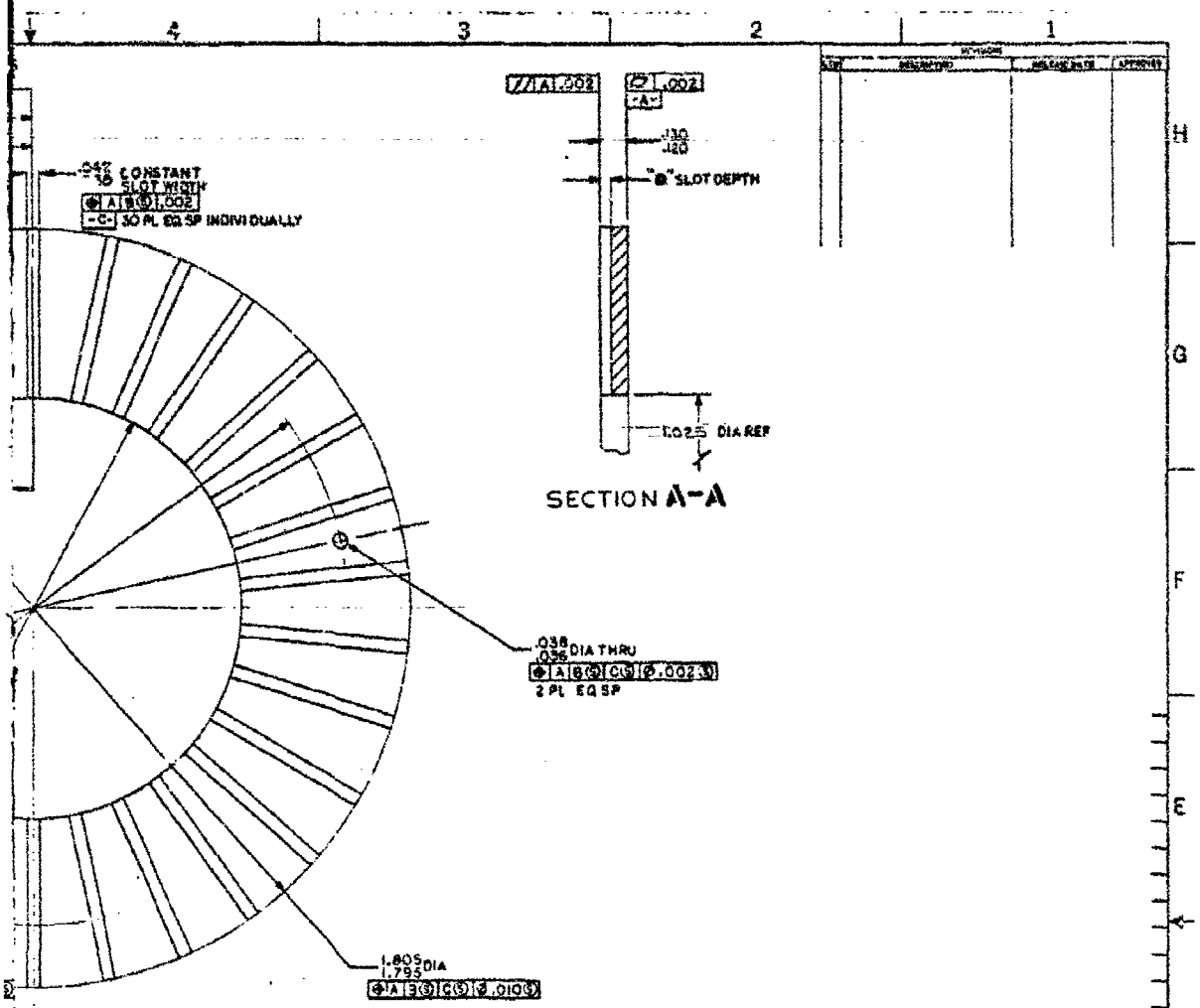

REVISIONS			
SYM	DESCRIPTION	DATE	APPROVED

SEE SHEET 2 BLOCK		CRES	SEE SHEET 2 BLOCK A
NAS 3-24,188	REVISE BY: W/3	TechSystems	WASHER, FLOW BALANCING
✓ SURFACE TEXTURE AS NOT SHOWN DRAWING		E 05824	1201420
		8/1	1 OF 1

DEVELOPMENT HARDWARE
FOR TEST OR EXPERIMENTATION

1201420

NOTES

1. INTERPRET DRAWING PER ATC-STD-4926.
2. MATCH MACHINE INDICATED DIAMETER 1 WITH MATING DIAMETER TO PROVIDE .002 TO .004 DIAMETRICAL CLEARANCE FIT.
3. ALTER ITEM AS SHOWN.
4. ELECTRON BEAM WELD PER ATC-STD-4897-1.
5. SEL ABSORB SPARK PLUG CO., 89 YORK STREET, AUBURN, NEW YORK.
6. PERMISSIBLE TO MACHINE (1) TO FINAL CONFIGURATION PRIOR TO WELDING.
7. MARK PER AS478-7A WITH 1201922 AND APPLICABLE BASE NO. OBLITERATE ORIGINAL IDENTIFICATION NUMBER WITHOUT DAMAGE TO THE PART.

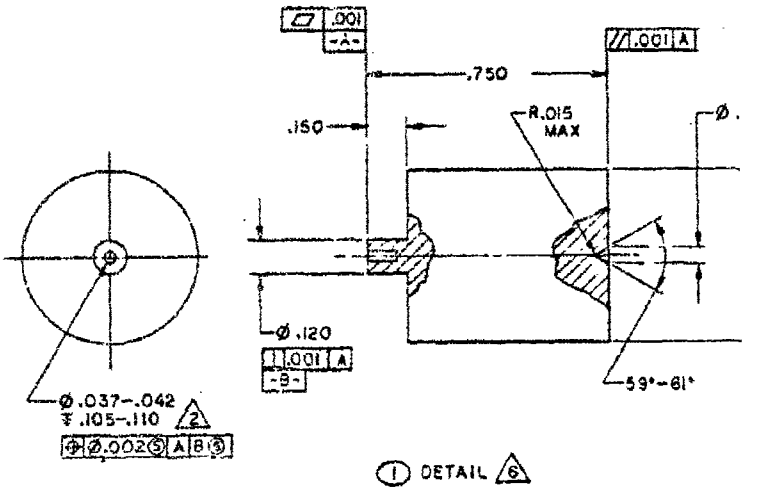

(1) DETAIL

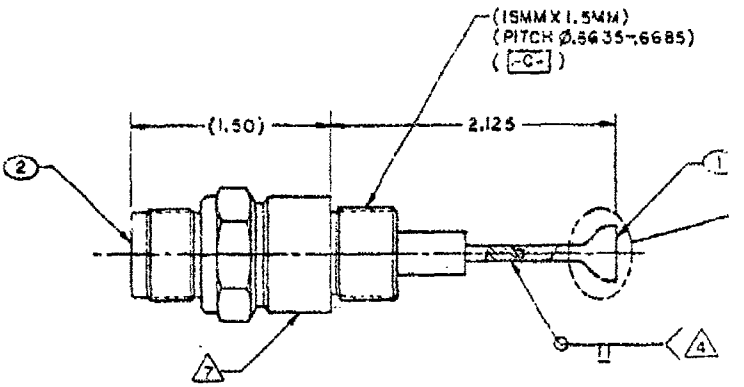

(9) ASSEMBLY

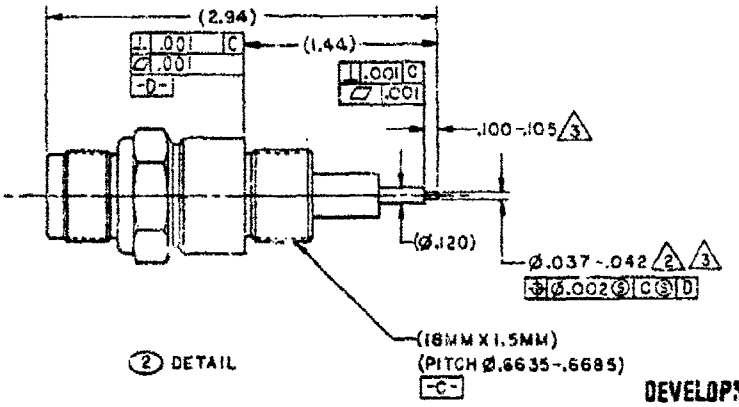

(2) DETAIL

DEVELOPMENT HARDWARE

FOR TEST OR EXPERIMENTATION

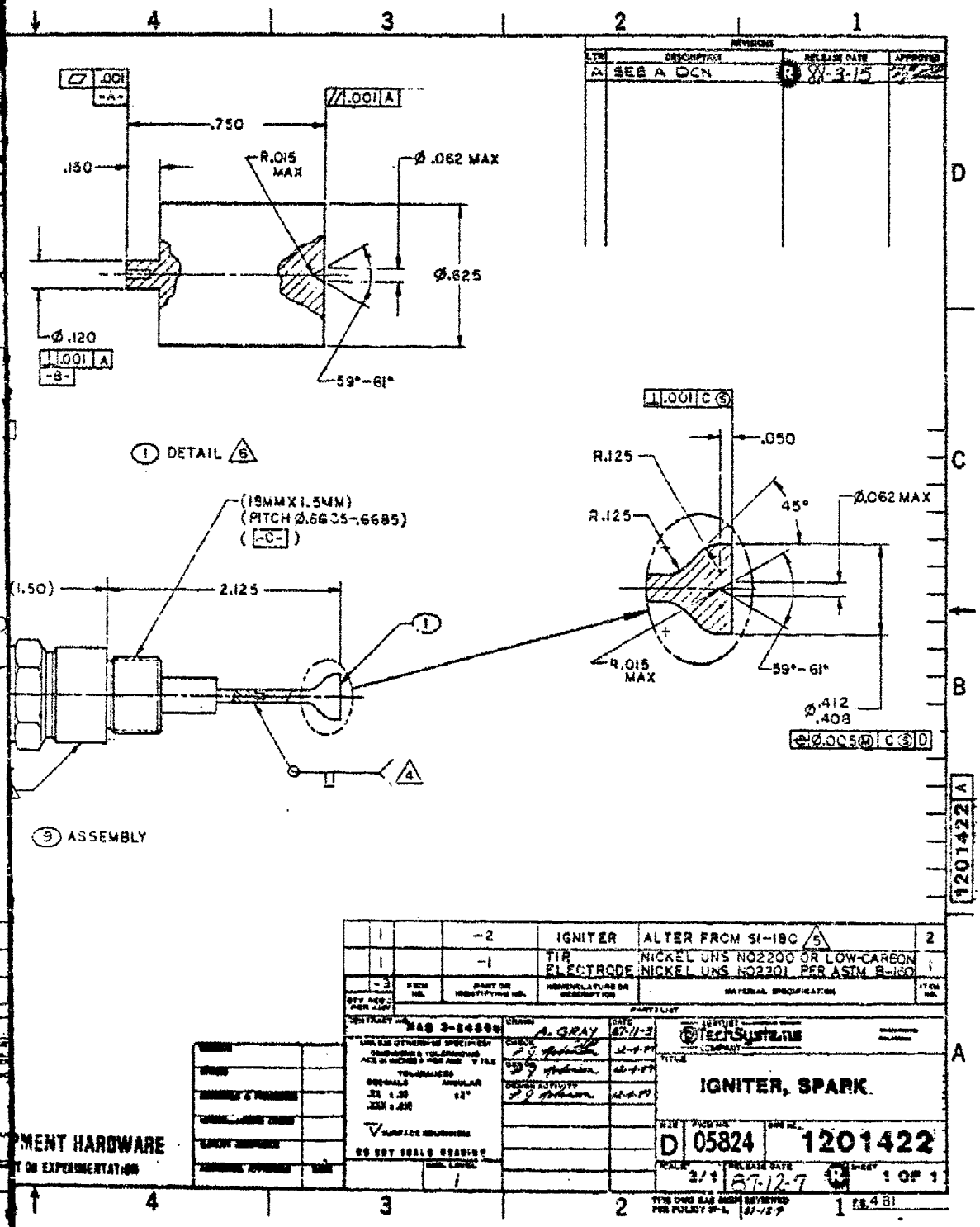
.750
.150
R.015 MAX
Ø .062 MAX
Ø.825
Ø.120
59°-61°
DETAIL
(18MM X 1.5MM)
(PITCH Ø.6635-.6685)
(1.50)
2.125
ASSEMBLY
.050
R.125
R.125
45°
Ø.062 MAX
R.015 MAX
59°-61°
Ø.412
.408
IGNITER
ALTER FROM SI-180
NICKEL UNS N02200 OR LOW-CARBON NICKEL UNS N02201 PER ASTM B-160
TIP, ELECTRODE
IGNITER, SPARK
D
05824
1201422
3/1
87-12-7
1 OF 1
SEE A DCN
PMENT HARDWARE
T OR EXPERIMENTATION

NOTES

1. INTERPRET DRAWING PER ATC-STD-4025.
2. ALTER AS SHOWN.
3. VALCOR ENGINEERING CORP., 2 LAWRENCE ROAD, SPRINGFIELD, NJ 07081.
4. MARK PER AS478-4A WITH 1201923 AND APPLICABLE DASH NO.

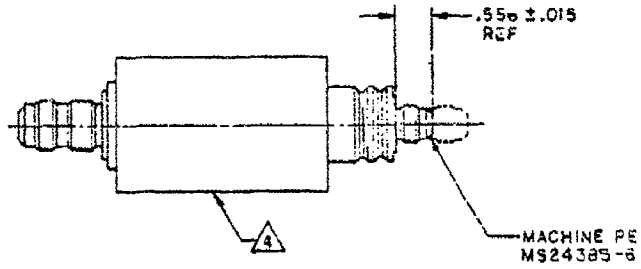

DEVELOPMENT HARDWARE
FOR TEST OR EXPERIMENTATION

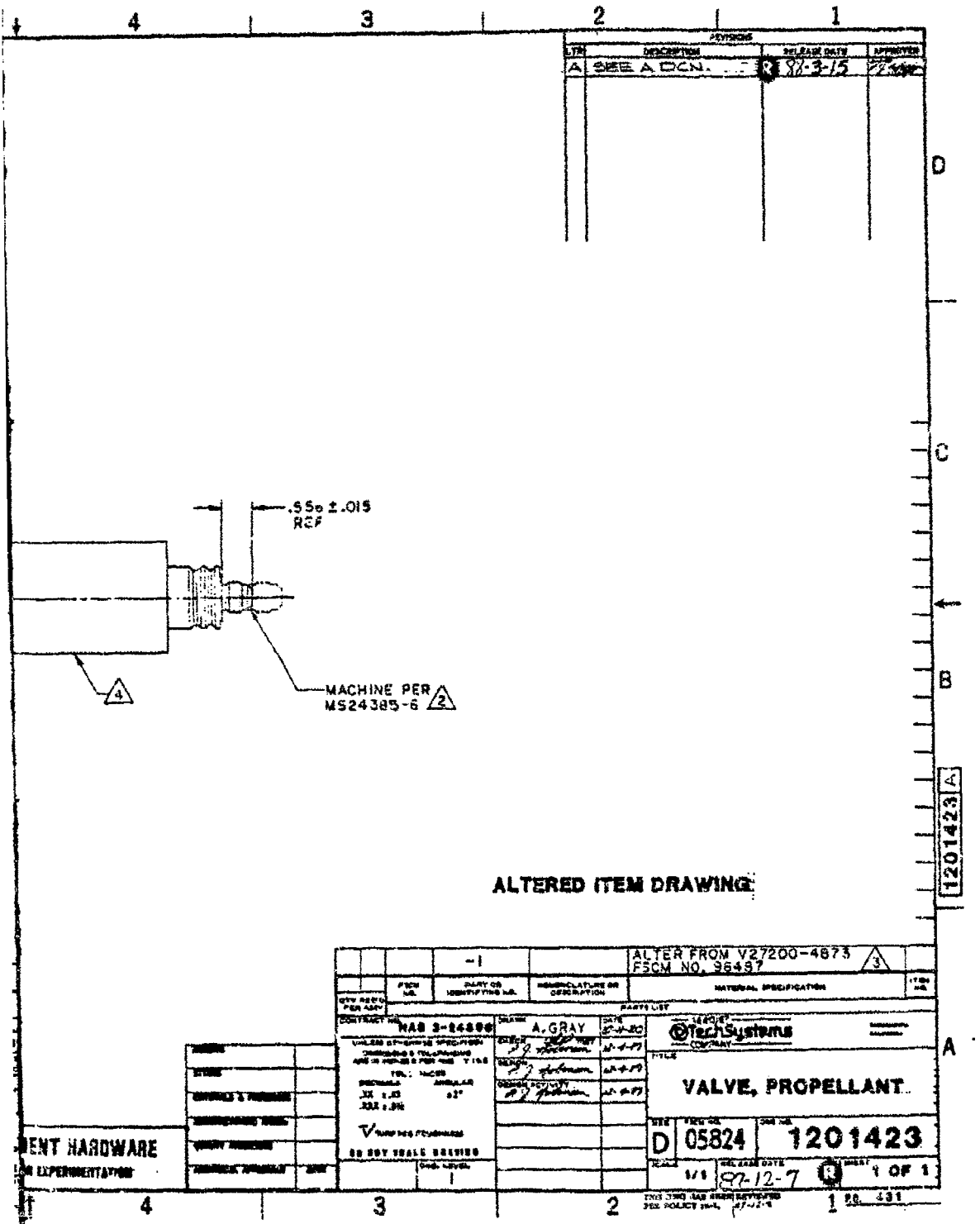
.556 ±.015
REF
MACHINE PER
MS24385-6
ALTERED ITEM DRAWING
ALTER FROM V27200-4873
FSCM NO. 96497
VALVE, PROPELLANT
A. GRAY
TechSystems
NAS 3-24890
D
05824
1201423
1/1
87-12-7
1 OF 1
DO NOT SCALE DRAWING
1201423 A

NOTES:

1. INTERPRET DRAWING PER ATC-STD-4025.

2. MATCH MACHINE INDICATED DIAMETER TO MATING DIAMETER TO PROVIDE FOR A .004 TO .008 DIAMETRICAL CLEARANCE FIT.

3. MARK PER AS478-2A WITH 1281429 AND APPLICABLE DASH NUMBER.

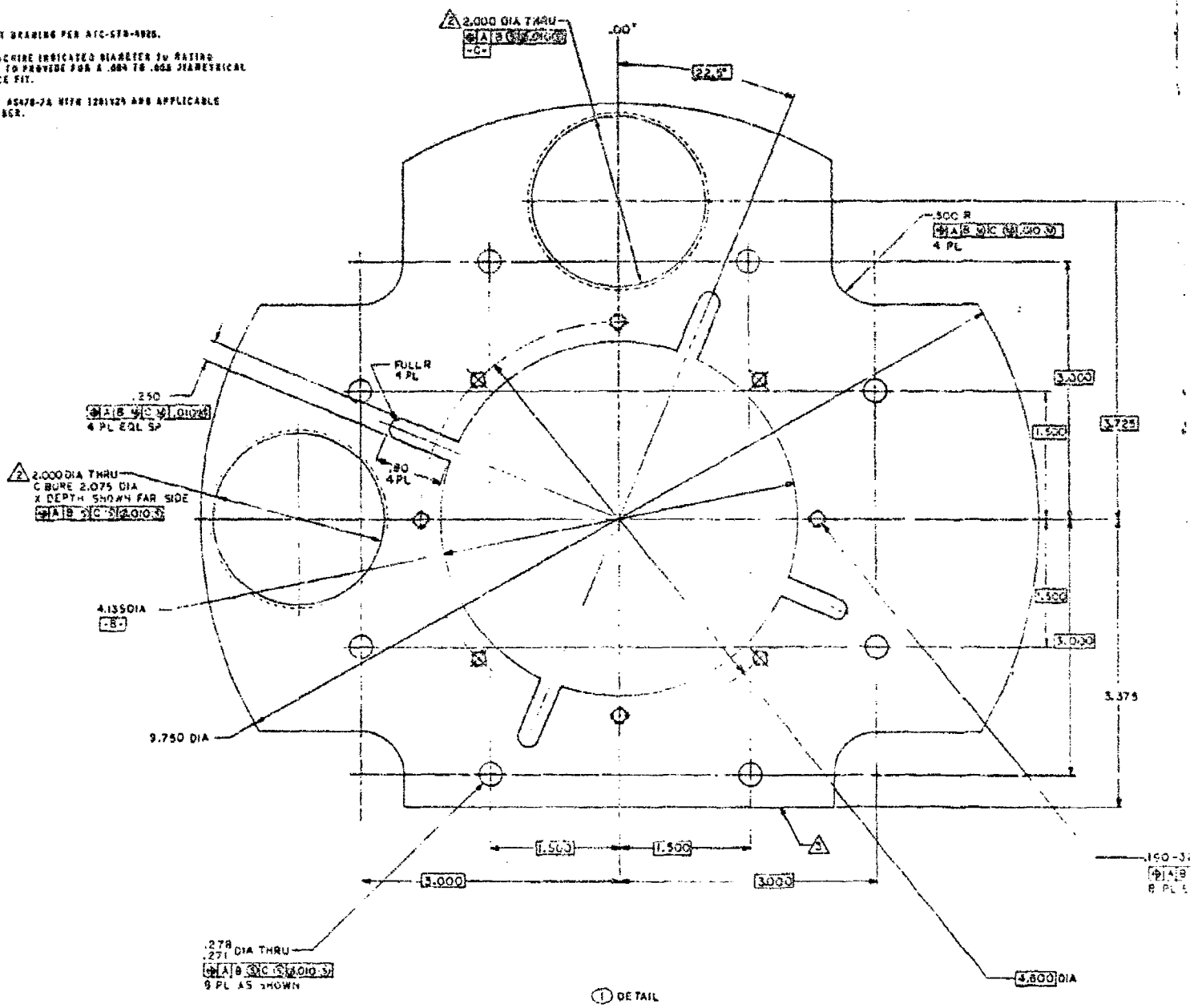

DEVELOPMENT HARD
FOR TEST OR EXPERIMENTAL

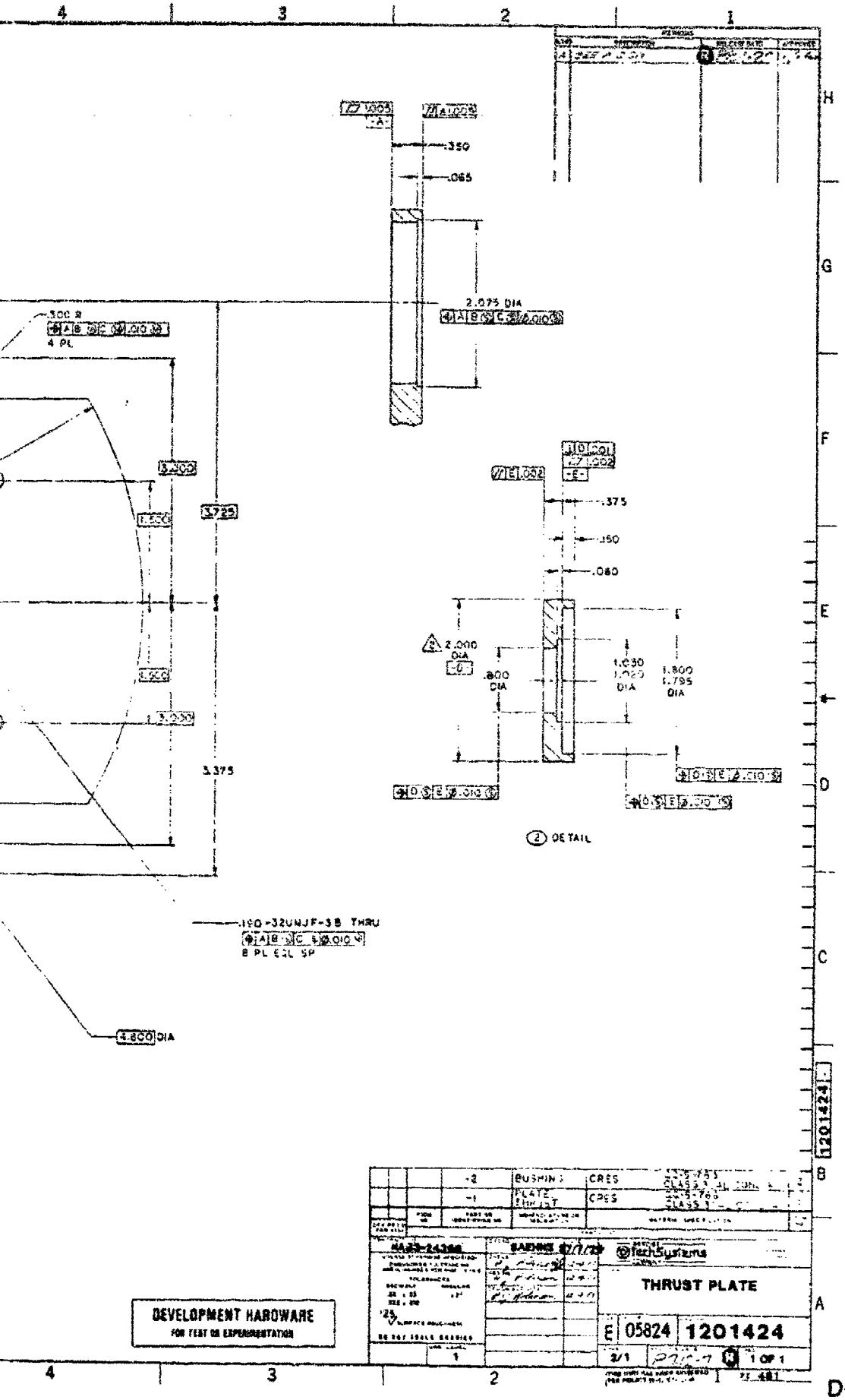
.350
.065
2.075 DIA
.300 R
4 PL
3.200
1.550
3.725
3.375
.190-32UNJF-3B THRU
8 PL EQL SP
4.800 DIA
.375
.150
.060
2.000 DIA
.800 DIA
1.030
1.025
DIA
1.800
1.795
DIA
2 DETAIL
-2
BUSHING
CRES
-1
PLATE THRUST
CRES
THRUST PLATE
E 05824 1201424
2/1
1 OF 1
DEVELOPMENT HARDWARE
FOR TEST OR EXPERIMENTATION